# Routing Workshop Lab

APNIC Workshop in SANOGXXVI

August 7 – 11, 2015. Mumbai, India.

APNIC

# IPv6 Addressing

- An IPv6 address is 128 bits long
- So the number of addresses are 2^128 =340282366920938463463374607431768211455 (39 decimal digits)
  =0xffffffffffffffffffffffffffffffff (32 hexadecimal digits)
- In hex 4 bit (nibble) is represented by a hex digit
- So 128 bit is reduced down to 32 hex digit

# IPv6 Address Representation

- Hexadecimal values of eight 16 bit fields
  - X:X:X:X:X:X:X:X  (X=16 bit number, ex: A2FE)
  - 16 bit number is converted to a 4 digit hexadecimal number
- Example:
  - FE38:DCE3:124C:C1A2:BA03:6735:EF1C:683D
  - – Abbreviated form of address
    - 4EED:0023:0000:0000:0000:036E:1250:2B00
    - →4EED:23:0:0:0:36E:1250:2B00
    - →4EED:23::36E:1250:2B00
    - (Null value can be used only once)

# IPv6 addressing structure

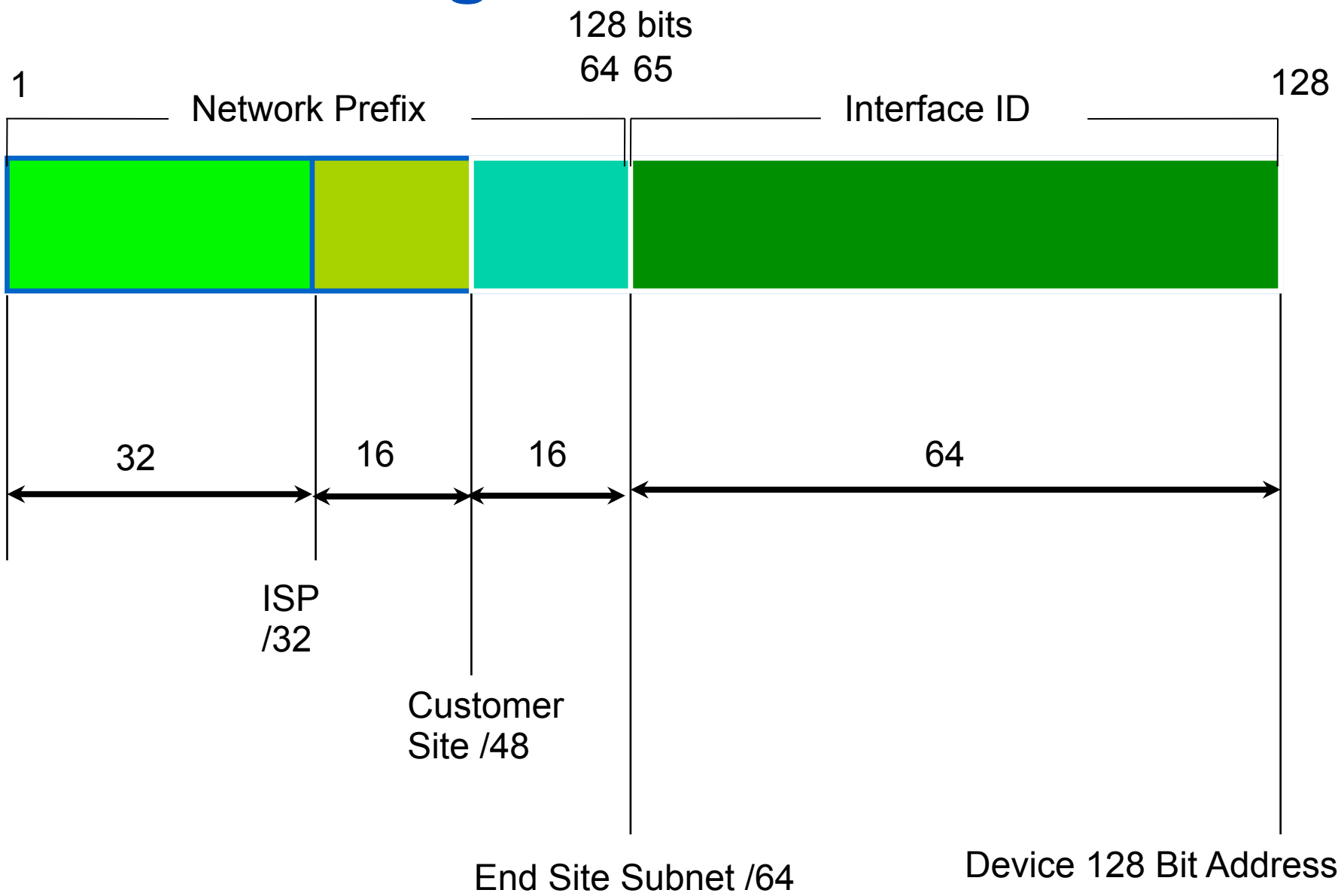

# Training ISP Network Topology

Scenario:

- Training ISP has 4 main operating area or region
- Each region has 2 small POP
- Each region will have one datacenter to host content
- Regional network are inter-connected with multiple link

# Training ISP Network Topology

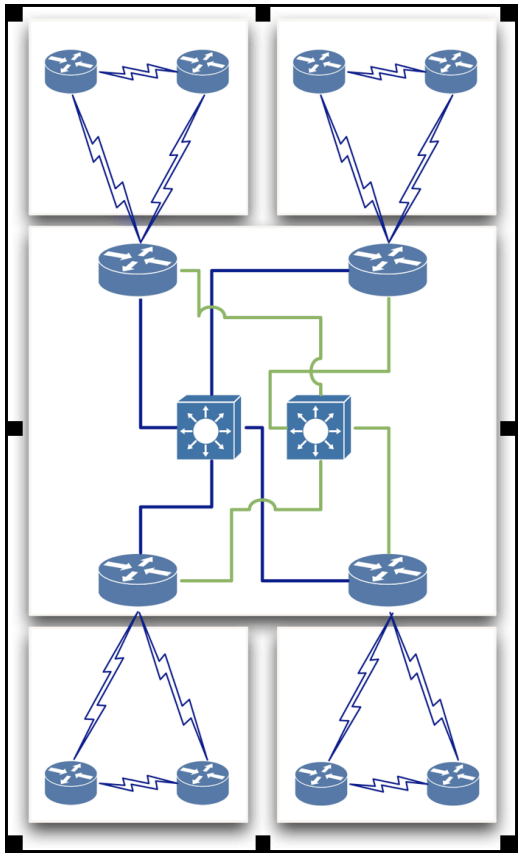

Training ISP Topology Diagram

# Training ISP Network Topology

Regional Network:

- Each regional network will have 3 routers
- 1 Core & 2 Edge Routers
- 2 Point of Presence (POP) for every region
- POP will use a router to terminate customer network i.e Edge Router
- Each POP is an aggregation point of ISP customer

# Training ISP Network Topology

Access Network:

- Connection between customer network & Edge router
- Usually 10 to 100 MBPS link
- Separate routing policy from most of ISP
- Training ISP will connect them on edge router with separate customer IP prefix

# Training ISP Network Topology

Transport Link:

- Inter-connection between regional core router
- Higher data transmission capacity then access link
- Training ISP has 2 transport link for link redundancy
- 2 Transport link i.e Purple link & Green link are connected to two career grade switch

# Training ISP Network Topology

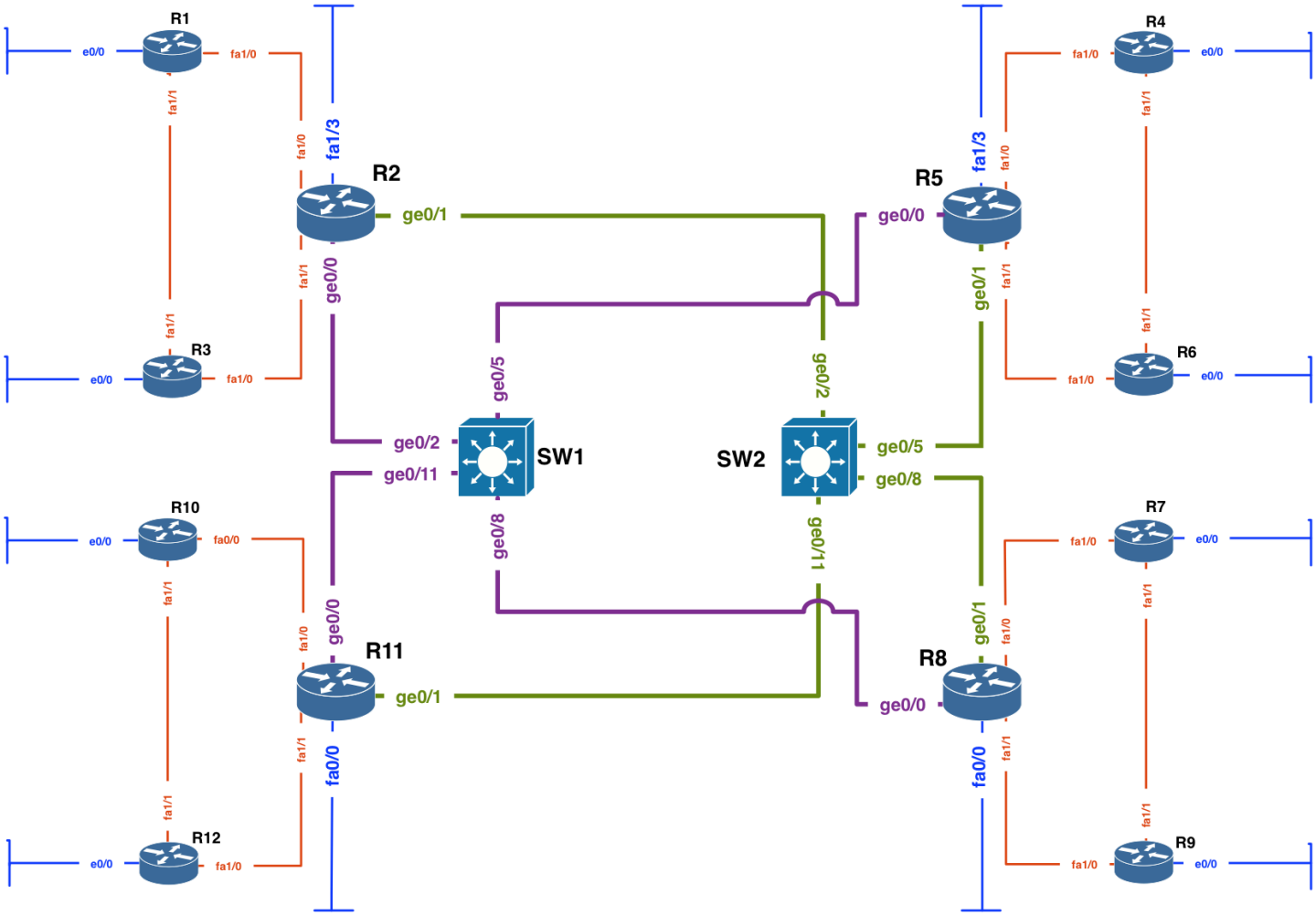


Training ISP Core IP Backbone

# Training ISP Network Topology

Design Consideration:

- Each regional network should have address summarization capability for customer block and CS link WAN.
- Prefix planning should have scalability option for next couple of years for both customer block and infrastructure
- No Summarization require for infrastructure WAN and loopback address

# Training ISP Network Topology

Design Consideration:

- All WAN link should be ICMP reachable for link monitoring purpose (At least from designated host)
- Conservation will get high preference for IPv4 address planning and aggregation will get high preference for IPv6 address planning.

# Training ISP Network Topology

Design Consideration:

- OSPF is running in ISP network to carry infrastructure IP prefix
- Each region is a separate OSPF area
- Transport core is in OSPF area 0
- Customer will connect on either static or eBGP (Not OSPF)
- iBGP will carry external prefix within ISP core IP network

# Training ISP IPV6 Addressing Plan

IPv6 address plan consideration:

- Big IPv6 address space can cause very very large routing table size
- Most transit service provider apply IPv6 aggregation prefix filter (i.e. anything other then /48 & <=/32 prefix size
- Prefix announcement need to send to Internet should be either /32 or /48 bit boundary

# Training ISP IPV6 Addressing Plan

IPv6 address plan consideration (RFC3177):

- WAN link can be used on /64 bit boundary
- End site/Customer sub allocation can be made between /48~/64 bit boundary
- APNIC Utilization/HD ratio will be calculated based on /56 end site assignment/sub-allocation

# Training ISP IPV6 Addressing Plan

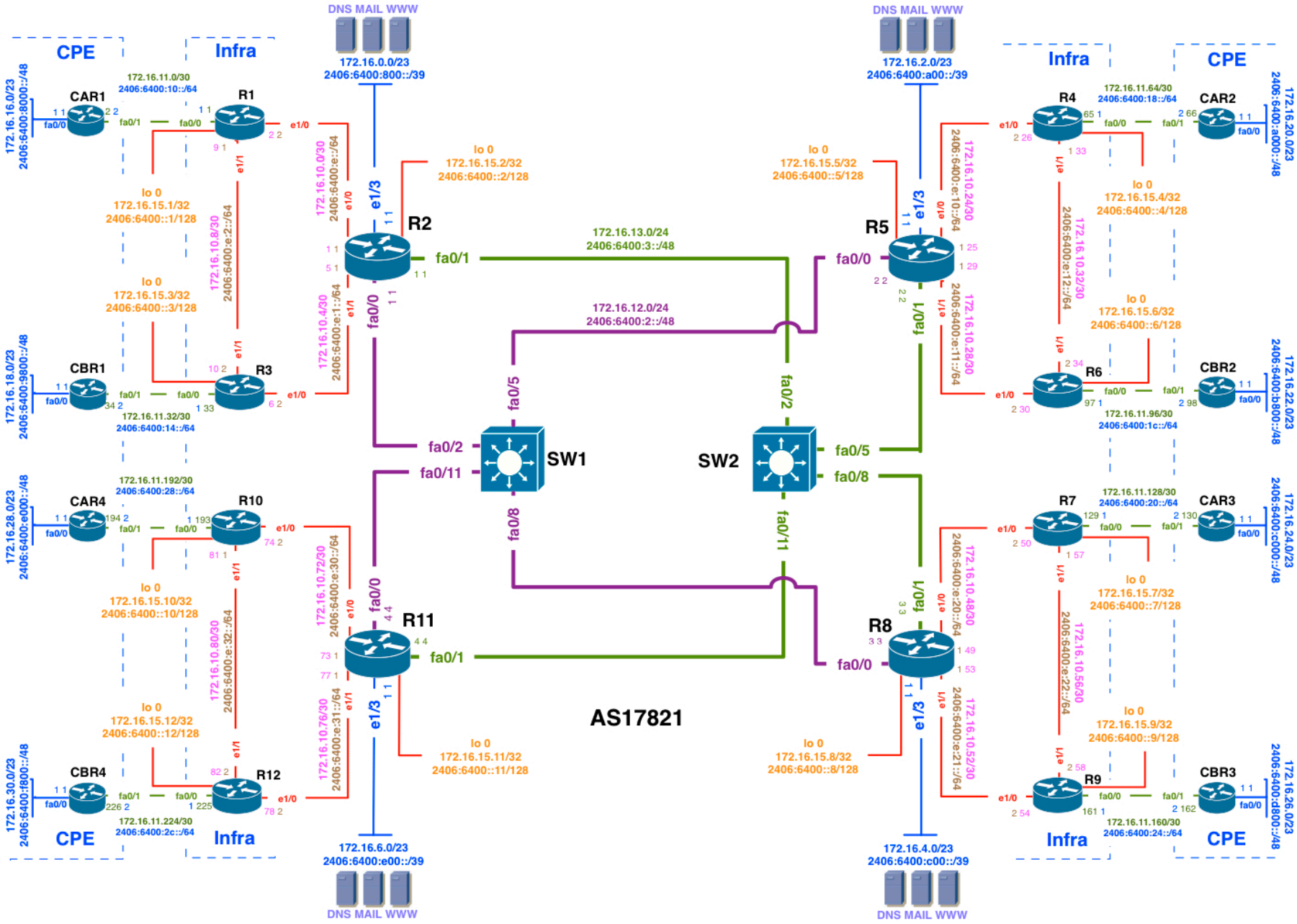

# Addressing Plans – ISP Infrastructure

- What about LANs?
  - /64 per LAN
- What about Point-to-Point links?
  - Protocol design expectation is that /64 is used
  - /127 now recommended/standardised
    - http://www.rfc-editor.org/rfc/rfc6164.txt
    - (reserve /64 for the link, but address it as a /127)
  - Other options:
    - /126s are being used (mirrors IPv4 /30)
    - /112s are being used
      - Leaves final 16 bits free for node IDs
    - Some discussion about /80s, /96s and /120s too

# Addressing Plans – ISP Infrastructure

- ISPs should receive /32 from their RIR
- Address block for router loop-back interfaces
  - Generally number all loopbacks out of **one** /48
  - /128 per loopback
- Address block for infrastructure
  - /48 allows 65k subnets
  - /48 per region (for the largest international networks)
  - /48 for whole backbone (for the majority of networks)
  - Summarise between sites if it makes sense

# Addressing Plans – Customer

- Customers get one /48
  - Unless they have more than 65k subnets in which case they get a second /48 (and so on)
- In typical deployments today:
  - Several ISPs give small customers a /56 or single LAN end-sites a /64, e.g.:
  - /64 if end-site will only ever be a LAN
  - /56 for medium end-sites (e.g. small business)
  - /48 for large end-sites
  - (This is another very active discussion area)

# Addressing Plans
# Planning

- Registries will usually allocate the next block to be contiguous with the first allocation
  - Minimum allocation is /32
  - Very likely that subsequent allocation will make this up to a /31
  - So plan accordingly

# Example Address Plan

- IPv6 Allocation Form Registry is
  - 2406:6400::/32
- IPv4 Allocation From Registry is
  - 172.16.0.0/19

# Training ISP IPV6 Addressing Plan

**Table 1: Top level distribution infrastructure & customer**

| Block# | Prefix | Description | Reverse Domain | SOR | Registration |
|---|---|---|---|---|---|
| 1 | **2406:6400::/32** | ***Parent Block*** | 0.0.4.6.6.0.4.2.ip6.arpa. | N/A | APNIC |
| | | | | | |
| 2 | 2406:6400:0000:0000::/36 | Infrastructure | 0.0.0.4.6.6.0.4.2.ip6.arpa. | No | Optional |
| | 2406:6400:1000:0000::/36 | | | | |
| | 2406:6400:2000:0000::/36 | | | | |
| | 2406:6400:3000:0000::/36 | | | | |
| | 2406:6400:4000:0000::/36 | | | | |
| | 2406:6400:5000:0000::/36 | | | | |
| | 2406:6400:6000:0000::/36 | | | | |
| | 2406:6400:7000:0000::/36 | | | | |
| 3 | 2406:6400:8000:0000::/36 | Customer network Region 1 | 8.0.0.4.6.6.0.4.2.ip6.arpa. | Not yet | Optional |
| | 2406:6400:9000:0000::/36 | | | | |
| 4 | 2406:6400:a000:0000::/36 | Customer network Region 2 | a.0.0.4.6.6.0.4.2.ip6.arpa. | Not yet | Optional |
| | 2406:6400:b000:0000::/36 | | | | |
| 5 | 2406:6400:c000:0000::/36 | Customer network Region 3 | c.0.0.4.6.6.0.4.2.ip6.arpa. | Not yet | Optional |
| | 2406:6400:d000:0000::/36 | | | | |
| 6 | 2406:6400:e000:0000::/36 | Customer network Region 4 | e.0.0.4.6.6.0.4.2.ip6.arpa. | Not yet | Optional |
| | 2406:6400:f000:0000::/36 | | | | |

# Training ISP IPV6 Addressing Plan

**Table 2: Top level summarization option infrastructure & customer**

| Block# | Prefix | Description | Reverse Domain |
|---|---|---|---|
| 7 | 2406:6400:8000:0000::/35 | CS net summary region1 [R2] | 2x/36 arpa domain |
| 8 | 2406:6400:a000:0000::/35 | CS net summary region2 [R5] | 2x/36 arpa domain |
| 9 | 2406:6400:c000:0000::/35 | CS net summary region3 [R8] | 2x/36 arpa domain |
| 10 | 2406:6400:e000:0000::/35 | CS net summary region4 [R11] | 2x/36 arpa domain |

# Training ISP IPV6 Addressing Plan

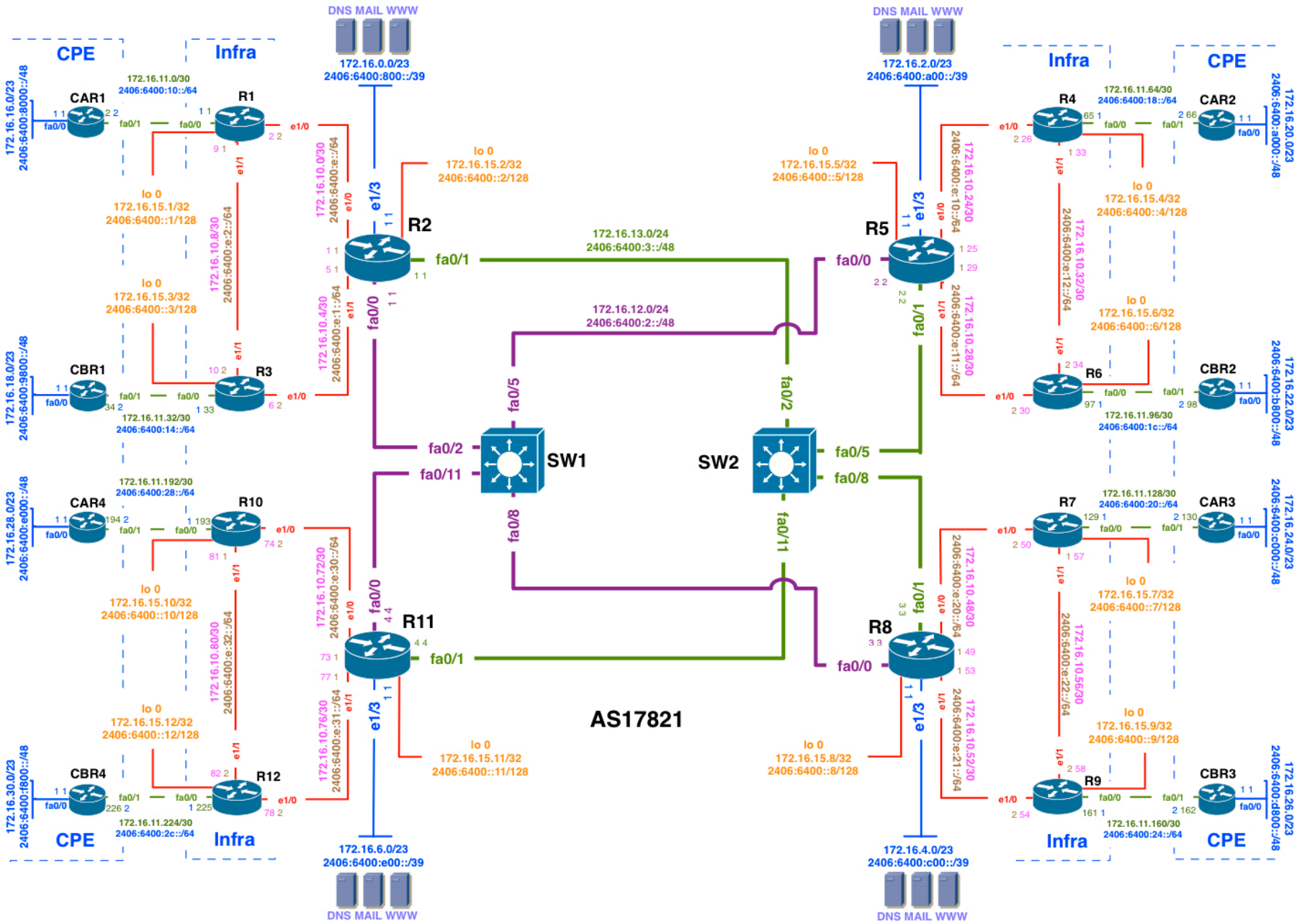

# Training ISP IPV6 Addressing Plan

**Table 3: Detail distribution infrastructure**

| Block# | Prefix | Description | Reverse Domain | SOR | Registration |
|---|---|---|---|---|---|
| 2 | ***2406:6400:0000:0000::/36*** | ***Infrastructure*** | 0.0.0.4.6.6.0.4.2.ip6.arpa. | No | Optional |
| | | | | | |
| 11 | 2406:6400:0000:0000::/40 | Loopback, Transport & WAN [Infra+CS] | 0.0.0.0.4.6.6.0.4.2.ip6.arpa. | No | Optional |
| | 2406:6400:0100:0000::/40 | | | | |
| | 2406:6400:0200:0000::/40 | | | | |
| | 2406:6400:0300:0000::/40 | | | | |
| | 2406:6400:0400:0000::/40 | | | | |
| | 2406:6400:0500:0000::/40 | | | | |
| | 2406:6400:0600:0000::/40 | | | | |
| | 2406:6400:0700:0000::/40 | | | | |
| 16 | 2406:6400:0800:0000::/40 | R2 DC | 8.0.0.0.4.6.6.0.4.2.ip6.arpa. | No | Recommeded |
| | 2406:6400:0900:0000::/40 | | | | |
| 17 | 2406:6400:0a00:0000::/40 | R5 DC | a.0.0.0.4.6.6.0.4.2.ip6.arpa. | No | Recommeded |
| | 2406:6400:0b00:0000::/40 | | | | |
| 18 | 2406:6400:0c00:0000::/40 | R8 DC | c.0.0.0.4.6.6.0.4.2.ip6.arpa. | No | Recommeded |
| | 2406:6400:0d00:0000::/40 | | | | |
| 19 | 2406:6400:0e00:0000::/40 | R11 DC | e.0.0.0.4.6.6.0.4.2.ip6.arpa. | No | Recommeded |
| | 2406:6400:0f00:0000::/40 | | | | |

# Training ISP IPV6 Addressing Plan

**Table 4: Datacenter prefix summarization options**

| Block# | Prefix | Description | Reverse Domain |
|---|---|---|---|
| 12 | 2406:6400:0800:0000::/39 | Region 1 DC Summary [R2] | |
| 13 | 2406:6400:0a00:0000::/39 | Region 2 DC Summary [R5] | |
| 14 | 2406:6400:0c00:0000::/39 | Region 3 DC Summary [R8] | |
| 15 | 2406:6400:0e00:0000::/39 | Region 4 DC Summary [R11] | |

# Training ISP IPV6 Addressing Plan

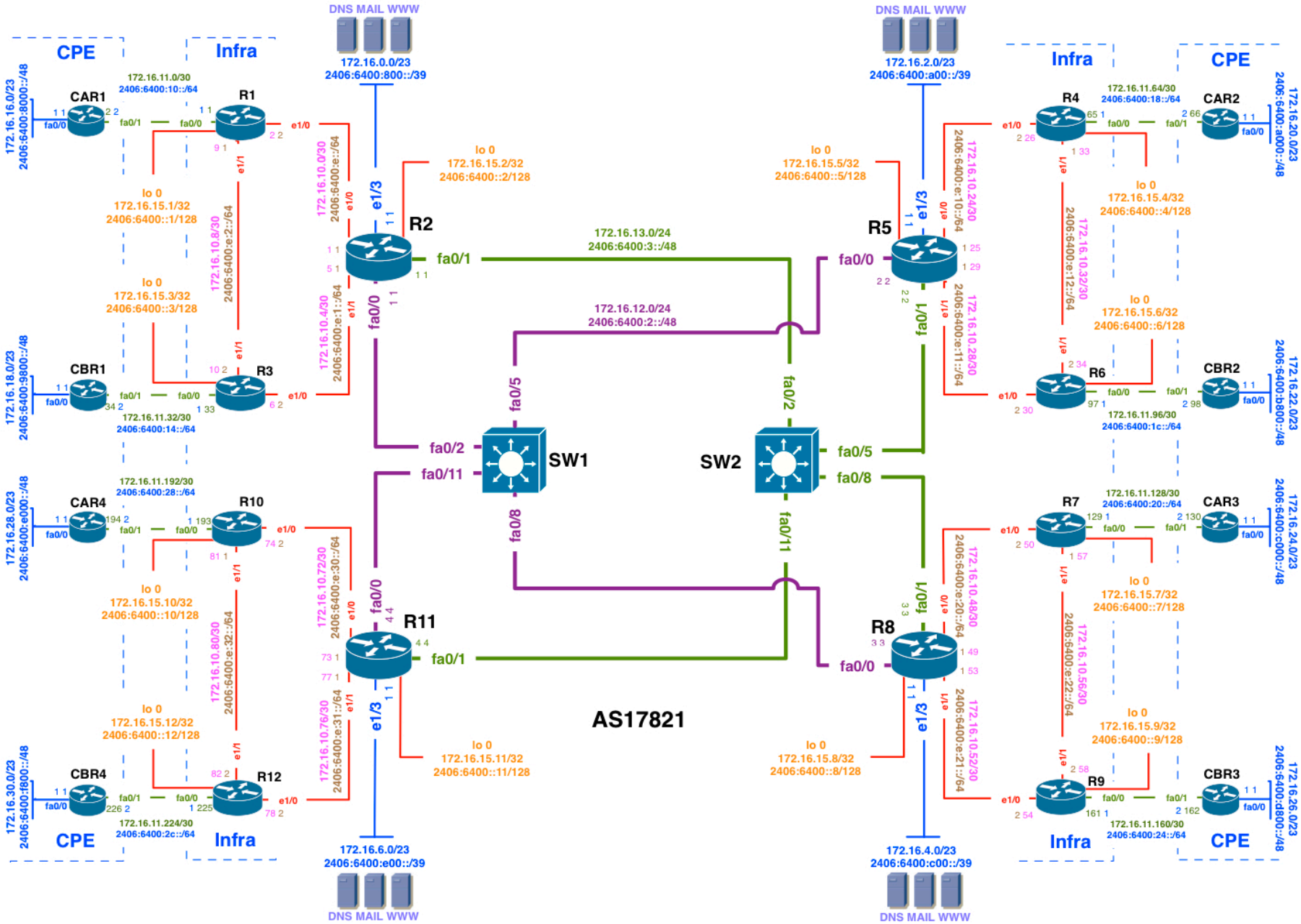

# Training ISP IPV6 Addressing Plan

**Table 5: Further detail loopback, transport & infrastructure WAN**

| Block# | Prefix | Description | Reverse Domain | SOR | Registration |
|---|---|---|---|---|---|
| ***11*** | ***2406:6400:0000:0000::/40*** | ***Loopback, Transport & Infra WAN*** | *0.0.0.0.4.6.6.0.4.2.ip6.arpa.* | | |
| | | | | | |
| 20 | 2406:6400:0000:0000::/48 | Loopback | | No | Recommeded |
| | 2406:6400:0001:0000::/48 | | | | |
| 21 | 2406:6400:0002:0000::/48 | Purple Transport | | No | Recommeded |
| 22 | 2406:6400:0003:0000::/48 | Green Transport | | No | Recommeded |
| | 2406:6400:0004:0000::/48 | | | | |
| | 2406:6400:0005:0000::/48 | | | | |
| | 2406:6400:0006:0000::/48 | | | | |
| | 2406:6400:0007:0000::/48 | | | | |
| | 2406:6400:0008:0000::/48 | | | | |
| | 2406:6400:0009:0000::/48 | | | | |
| | 2406:6400:000A:0000::/48 | | | | |
| | 2406:6400:000B:0000::/48 | | | | |
| | 2406:6400:000C:0000::/48 | | | | |
| | 2406:6400:000D:0000::/48 | | | | |
| 23 | 2406:6400:000E:0000::/48 | WAN Prefix Infra Link | | No | Recommeded |
| | 2406:6400:000F:0000::/48 | | | | |

# Training ISP IPV6 Addressing Plan

**Table 6: Further detail CS link WAN**

| Block# | Prefix | Description | Reverse Domain | SOR | Registration |
|---|---|---|---|---|---|
| 27 | 2406:6400:0010:0000::/48 | WAN Prefix CS Link R1 Region1 | | No | Recommeded |
| | 2406:6400:0011:0000::/48 | | | | |
| | 2406:6400:0012:0000::/48 | | | | |
| | 2406:6400:0013:0000::/48 | | | | |
| 28 | 2406:6400:0014:0000::/48 | WAN Prefix CS Link R3 Region1 | | No | Recommeded |
| | 2406:6400:0015:0000::/48 | | | | |
| | 2406:6400:0016:0000::/48 | | | | |
| | 2406:6400:0017:0000::/48 | | | | |
| 32 | 2406:6400:0018:0000::/48 | WAN Prefix CS Link R4 Region2 | | No | Recommeded |
| | 2406:6400:0019:0000::/48 | | | | |
| | 2406:6400:001A:0000::/48 | | | | |
| | 2406:6400:001B:0000::/48 | | | | |
| 33 | 2406:6400:001C:0000::/48 | WAN Prefix CS Link R6 Region2 | | No | Recommeded |
| | 2406:6400:001D:0000::/48 | | | | |
| | 2406:6400:001E:0000::/48 | | | | |
| | 2406:6400:001F:0000::/48 | | | | |
| 37 | 2406:6400:0020:0000::/48 | WAN Prefix CS Link R7 Region3 | | No | Recommeded |
| | 2406:6400:0021:0000::/48 | | | | |
| | 2406:6400:0022:0000::/48 | | | | |
| | 2406:6400:0023:0000::/48 | | | | |
| 38 | 2406:6400:0024:0000::/48 | WAN Prefix CS Link R9 Region3 | | No | Recommeded |
| | 2406:6400:0025:0000::/48 | | | | |
| | 2406:6400:0026:0000::/48 | | | | |
| | 2406:6400:0027:0000::/48 | | | | |
| 42 | 2406:6400:0028:0000::/48 | WAN Prefix CS Link R10 Region4 | | No | Recommeded |
| | 2406:6400:0029:0000::/48 | | | | |
| | 2406:6400:002A:0000::/48 | | | | |
| | 2406:6400:002B:0000::/48 | | | | |
| 43 | 2406:6400:002C:0000::/48 | WAN Prefix CS Link R12 Region4 | | No | Recommeded |
| | 2406:6400:002D:0000::/48 | | | | |
| | 2406:6400:002E:0000::/48 | | | | |
| | 2406:6400:002F:0000::/48 | | | | |

# Training ISP IPV6 Addressing Plan

**Table 7: CS link WAN summarization options**

| Block# | Prefix | Description | Reverse Domain |
|---|---|---|---|
| 24 | 2406:6400:0010:0000::/45 | WAN CS Link Region1 Summary [R2] | |
| 25 | 2406:6400:0010:0000::/46 | WAN CS Link Region1 POP1 Summary [R1] | |
| 26 | 2406:6400:0014:0000::/46 | WAN CS Link Region1 POP2 Summary [R3] | |

| Block# | Prefix | Description | Reverse Domain |
|---|---|---|---|
| 29 | 2406:6400:0018:0000::/45 | WAN Prefix CS Link Region2 Summary [R5] | |
| 30 | 2406:6400:0018:0000::/46 | WAN CS Link Region2 POP1 Summary [R4] | |
| 31 | 2406:6400:001C:0000::/46 | WAN CS Link Region2 POP2 Summary [R6] | |

| Block# | Prefix | Description | Reverse Domain |
|---|---|---|---|
| 34 | 2406:6400:0020:0000::/45 | WAN Prefix CS Link Region3 Summary [R8] | |
| 35 | 2406:6400:0020:0000::/46 | WAN CS Link Region3 POP1 Summary [R7] | |
| 36 | 2406:6400:0024:0000::/46 | WAN CS Link Region3 POP2 Summary [R9] | |

| Block# | Prefix | Description | Reverse Domain |
|---|---|---|---|
| 39 | 2406:6400:0028:0000::/45 | WAN Prefix CS Link Region4 Summary [R11] | |
| 40 | 2406:6400:0028:0000::/46 | WAN CS Link Region4 POP1 Summary [R10] | |
| 41 | 2406:6400:002C:0000::/46 | WAN CS Link Region4 POP2 Summary [R12] | |

# Training ISP IPV6 Addressing Plan

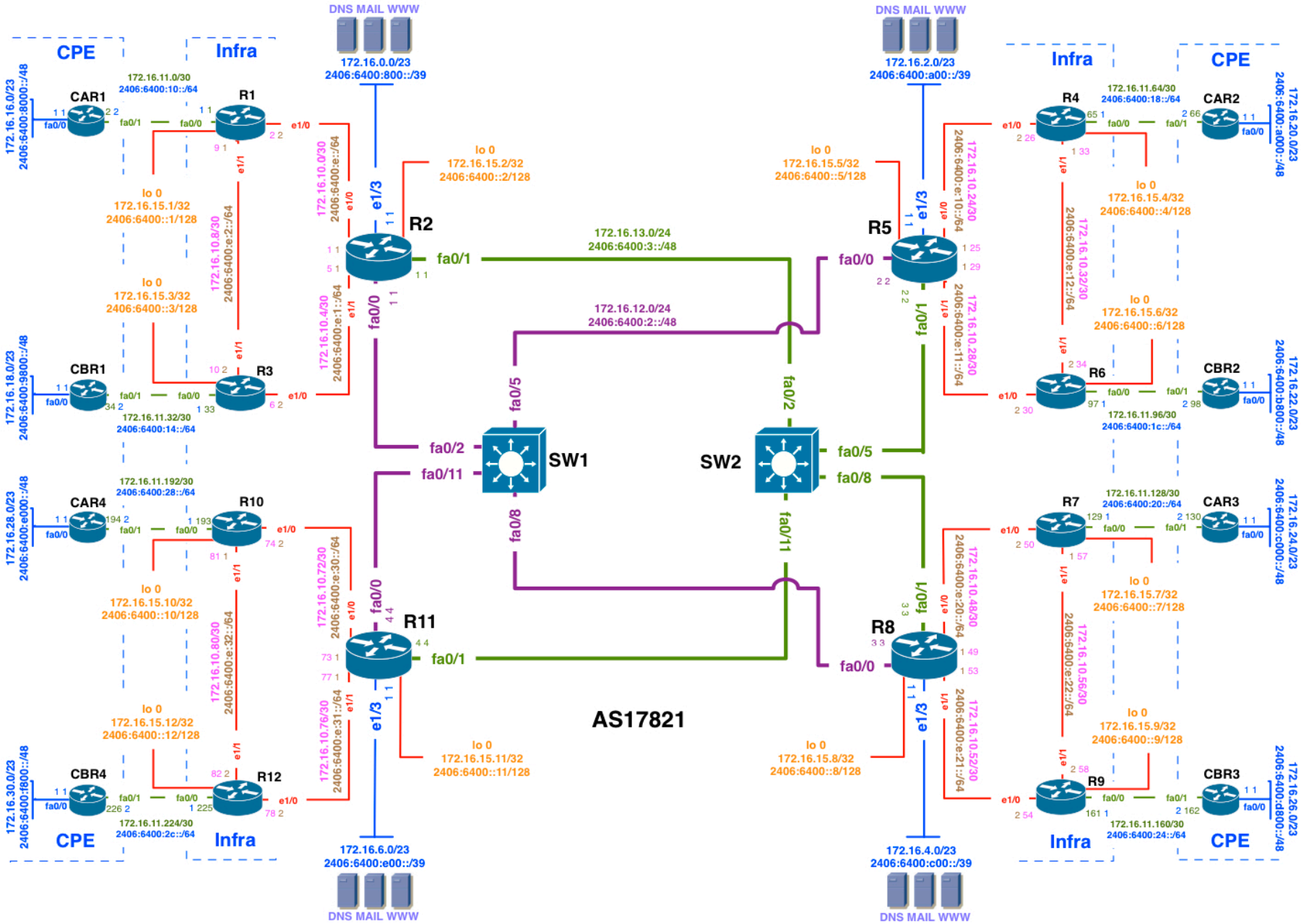

# Training ISP IPV6 Addressing Plan

**Table 8: Further detail loopback**

| Block# | Prefix | Description | PTR Record | SOR | Registration |
|---|---|---|---|---|---|
| 20 | 2406:6400:0000:0000::/48 | Loopback | | No | Recommeded |
| | | | YES | | |
| 43 | 2406:6400:0000:0000::1/128 | Router1 loopback 0 | YES | No | No |
| 44 | 2406:6400:0000:0000::2/128 | Router2 loopback 0 | YES | No | No |
| 45 | 2406:6400:0000:0000::3/128 | Router3 loopback 0 | YES | No | No |
| 46 | 2406:6400:0000:0000::4/128 | Router4 loopback 0 | YES | No | No |
| 47 | 2406:6400:0000:0000::5/128 | Router5 loopback 0 | YES | No | No |
| 48 | 2406:6400:0000:0000::6/128 | Router6 loopback 0 | YES | No | No |
| 49 | 2406:6400:0000:0000::7/128 | Router7 loopback 0 | YES | No | No |
| 50 | 2406:6400:0000:0000::8/128 | Router8 loopback 0 | YES | No | No |
| 51 | 2406:6400:0000:0000::9/128 | Router9 loopback 0 | YES | No | No |
| 52 | 2406:6400:0000:0000::10/128 | Router10 loopback 0 | YES | No | No |
| 53 | 2406:6400:0000:0000::11/128 | Router11 loopback 0 | YES | No | No |
| 54 | 2406:6400:0000:0000::12/128 | Router12 loopback 0 | YES | No | No |

# Training ISP IPV6 Addressing Plan

**Table 9: Further detail transport**

| Block# | Prefix | Description | PTR Record | SOR | Registration |
|---|---|---|---|---|---|
| 21 | 2406:6400:0002:0000::/48 | Purple Transport | | No | Recommeded |
| | | | | | |
| | 2406:6400:0002:0000::1/48 | Router2 fa0/0 | YES | No | No |
| | 2406:6400:0002:0000::2/48 | Router5 fa0/0 | YES | No | No |
| | 2406:6400:0002:0000::3/48 | Router8 fa0/0 | YES | No | No |
| | 2406:6400:0002:0000::4/48 | Router11 fa0/0 | YES | No | No |
| | | | | | |
| **Block#** | **Prefix** | **Description** | **PTR Record** | **SOR** | **Registration** |
| 22 | 2406:6400:0003:0000::/48 | Green Transport | | No | Recommended |
| | | | | | |
| | 2406:6400:0003:0000::1/48 | Router2 fa0/1 | YES | No | No |
| | 2406:6400:0003:0000::2/48 | Router5 fa0/1 | YES | No | No |
| | 2406:6400:0003:0000::3/48 | Router8 fa0/1 | YES | No | No |
| | 2406:6400:0003:0000::4/48 | Router11 fa0/1 | YES | No | No |

# Training ISP IPV6 Addressing Plan

**Table 10: Further detail Infra WAN**

| Block# | Prefix | Description | PTR Record | SOR | Registration |
|---|---|---|---|---|---|
| 23 | 2406:6400:000E:0000::/48 | WAN Prefix Infra Link | | No | Recommeded |
| | | | | | |
| 55 | 2406:6400:000E:0000::/64 | R2[::1]-R1[::2] | YES | No | No |
| 56 | 2406:6400:000E:0001::/64 | R2[::1]-R3[::2] | YES | No | No |
| 57 | 2406:6400:000E:0002::/64 | R1[::1]-R3[::2] | YES | No | No |
| | 2406:6400:000E:0003::/64 | | | | |
| | 2406:6400:000E:0004::/64 | | | | |
| | 2406:6400:000E:0005::/64 | | | | |
| | 2406:6400:000E:0006::/64 | | | | |
| | 2406:6400:000E:0007::/64 | | | | |
| | 2406:6400:000E:0008::/64 | | | | |
| | 2406:6400:000E:0009::/64 | | | | |
| | 2406:6400:000E:000A::/64 | | | | |
| | 2406:6400:000E:000B::/64 | | | | |
| | 2406:6400:000E:000C::/64 | | | | |
| | 2406:6400:000E:000D::/64 | | | | |
| | 2406:6400:000E:000E::/64 | | | | |
| | 2406:6400:000E:000F::/64 | | | | |
| 58 | 2406:6400:000E:0010::/64 | R5[::1]-R4[::2] | YES | No | No |
| 59 | 2406:6400:000E:0011::/64 | R5[::1]-R6[::2] | YES | No | No |
| 60 | 2406:6400:000E:0012::/64 | R4[::1]-R6[::2] | YES | No | No |
| | 2406:6400:000E:0013::/64 | | | | |
| | 2406:6400:000E:0014::/64 | | | | |
| | 2406:6400:000E:0015::/64 | | | | |
| | 2406:6400:000E:0016::/64 | | | | |
| | 2406:6400:000E:0017::/64 | | | | |
| | 2406:6400:000E:0018::/64 | | | | |
| | 2406:6400:000E:0019::/64 | | | | |
| | 2406:6400:000E:001A::/64 | | | | |
| | 2406:6400:000E:001B::/64 | | | | |
| | 2406:6400:000E:001C::/64 | | | | |
| | 2406:6400:000E:001D::/64 | | | | |
| | 2406:6400:000E:001E::/64 | | | | |
| | 2406:6400:000E:001F::/64 | | | | |
| 61 | 2406:6400:000E:0020::/64 | R8[::1]-R7[::2] | YES | No | No |
| 62 | 2406:6400:000E:0021::/64 | R8[::1]-R9[::2] | YES | No | No |
| 63 | 2406:6400:000E:0022::/64 | R7[::1]-R9[::2] | YES | No | No |
| | 2406:6400:000E:0023::/64 | | | | |
| | 2406:6400:000E:0024::/64 | | | | |
| | 2406:6400:000E:0025::/64 | | | | |
| | 2406:6400:000E:0026::/64 | | | | |
| | 2406:6400:000E:0027::/64 | | | | |
| | 2406:6400:000E:0028::/64 | | | | |
| | 2406:6400:000E:0029::/64 | | | | |
| | 2406:6400:000E:002A::/64 | | | | |
| | 2406:6400:000E:002B::/64 | | | | |
| | 2406:6400:000E:002C::/64 | | | | |
| | 2406:6400:000E:002D::/64 | | | | |
| | 2406:6400:000E:002E::/64 | | | | |
| | 2406:6400:000E:002F::/64 | | | | |
| 64 | 2406:6400:000E:0030::/64 | R11[::1]-R10[::2] | YES | No | No |
| 65 | 2406:6400:000E:0031::/64 | R11[::1]-R12[::2] | YES | No | No |
| 66 | 2406:6400:000E:0032::/64 | R10[::1]-R12[::2] | YES | No | No |
| | 2406:6400:000E:0033::/64 | | | | |
| | 2406:6400:000E:0034::/64 | | | | |
| | 2406:6400:000E:0035::/64 | | | | |
| | 2406:6400:000E:0036::/64 | | | | |
| | 2406:6400:000E:0037::/64 | | | | |
| | 2406:6400:000E:0038::/64 | | | | |
| | 2406:6400:000E:0039::/64 | | | | |
| | 2406:6400:000E:003A::/64 | | | | |

# Training ISP IPV6 Addressing Plan

**Table 11: Detail CS link WAN Region 1**

| Block# | Prefix | Description | PTR Record | SOR | Registration |
|---|---|---|---|---|---|
| 27 | 2406:6400:0010:0000::/48 | WAN Prefix CS Link R1 Region1 | | No | Recommeded |
| | 2406:6400:0010:0000::/64 | R1[::1]-CAR1[::2] | Yes | No | No |
| | 2406:6400:0010:0001::/64 | | Yes | No | No |
| | 2406:6400:0010:0002::/64 | | Yes | No | No |
| | 2406:6400:0010:0003::/64 | | Yes | No | No |
| | 2406:6400:0010:0004::/64 | | Yes | No | No |
| | 2406:6400:0010:0005::/64 | | Yes | No | No |
| | 2406:6400:0010:0006::/64 | | Yes | No | No |
| | 2406:6400:0010:0007::/64 | | Yes | No | No |
| | 2406:6400:0010:0008::/64 | | Yes | No | No |
| | 2406:6400:0010:0009::/64 | | Yes | No | No |
| | 2406:6400:0010:000A::/64 | | Yes | No | No |
| | 2406:6400:0010:000B::/64 | | Yes | No | No |
| | 2406:6400:0010:000C::/64 | | Yes | No | No |
| | 2406:6400:0010:000D::/64 | | Yes | No | No |
| | 2406:6400:0010:000E::/64 | | Yes | No | No |
| | 2406:6400:0010:000F::/64 | | Yes | No | No |
| **Block#** | **Prefix** | **Description** | **PTR Record** | **SOR** | **Registration** |
| 28 | 2406:6400:0014:0000::/48 | WAN Prefix CS Link R3 Region1 | | No | Recommeded |
| | 2406:6400:0014:0000::/64 | R3[::1]-CBR1[::2] | Yes | No | No |
| | 2406:6400:0014:0001::/64 | | Yes | No | No |
| | 2406:6400:0014:0002::/64 | | Yes | No | No |
| | 2406:6400:0014:0003::/64 | | Yes | No | No |
| | 2406:6400:0014:0004::/64 | | Yes | No | No |
| | 2406:6400:0014:0005::/64 | | Yes | No | No |
| | 2406:6400:0014:0006::/64 | | Yes | No | No |
| | 2406:6400:0014:0007::/64 | | Yes | No | No |
| | 2406:6400:0014:0008::/64 | | Yes | No | No |
| | 2406:6400:0014:0009::/64 | | Yes | No | No |
| | 2406:6400:0014:000A::/64 | | Yes | No | No |
| | 2406:6400:0014:000B::/64 | | Yes | No | No |
| | 2406:6400:0014:000C::/64 | | Yes | No | No |
| | 2406:6400:0014:000D::/64 | | Yes | No | No |
| | 2406:6400:0014:000E::/64 | | Yes | No | No |
| | 2406:6400:0014:000F::/64 | | Yes | No | No |

# Training ISP IPV6 Addressing Plan

**Table 12: Detail CS link WAN Region 2**

| Block# | Prefix | Description | PTR Record | SOR | Registration |
|---|---|---|---|---|---|
| 32 | 2406:6400:0018:0000::/48 | WAN Prefix CS Link R4 Region2 | | No | Recommeded |
| | 2406:6400:0018:0000::/64 | R4[::1]-CAR2[::2] | Yes | No | No |
| | 2406:6400:0018:0001::/64 | | Yes | No | No |
| | 2406:6400:0018:0002::/64 | | Yes | No | No |
| | 2406:6400:0018:0003::/64 | | Yes | No | No |
| | 2406:6400:0018:0004::/64 | | Yes | No | No |
| | 2406:6400:0018:0005::/64 | | Yes | No | No |
| | 2406:6400:0018:0006::/64 | | Yes | No | No |
| | 2406:6400:0018:0007::/64 | | Yes | No | No |
| | 2406:6400:0018:0008::/64 | | Yes | No | No |
| | 2406:6400:0018:0009::/64 | | Yes | No | No |
| | 2406:6400:0018:000A::/64 | | Yes | No | No |
| | 2406:6400:0018:000B::/64 | | Yes | No | No |
| | 2406:6400:0018:000C::/64 | | Yes | No | No |
| | 2406:6400:0018:000D::/64 | | Yes | No | No |
| | 2406:6400:0018:000E::/64 | | Yes | No | No |
| | 2406:6400:0018:000F::/64 | | Yes | No | No |
| **Block#** | **Prefix** | **Description** | **PTR Record** | **SOR** | **Registration** |
| 33 | 2406:6400:001C:0000::/48 | WAN Prefix CS Link R6 Region2 | | No | Recommeded |
| | 2406:6400:001C:0000::/64 | R6[::1]-CBR2[::2] | Yes | No | No |
| | 2406:6400:001C:0001::/64 | | Yes | No | No |
| | 2406:6400:001C:0002::/64 | | Yes | No | No |
| | 2406:6400:001C:0003::/64 | | Yes | No | No |
| | 2406:6400:001C:0004::/64 | | Yes | No | No |
| | 2406:6400:001C:0005::/64 | | Yes | No | No |
| | 2406:6400:001C:0006::/64 | | Yes | No | No |
| | 2406:6400:001C:0007::/64 | | Yes | No | No |
| | 2406:6400:001C:0008::/64 | | Yes | No | No |
| | 2406:6400:001C:0009::/64 | | Yes | No | No |
| | 2406:6400:001C:000A::/64 | | Yes | No | No |
| | 2406:6400:001C:000B::/64 | | Yes | No | No |
| | 2406:6400:001C:000C::/64 | | Yes | No | No |
| | 2406:6400:001C:000D::/64 | | Yes | No | No |
| | 2406:6400:001C:000E::/64 | | Yes | No | No |
| | 2406:6400:001C:000F::/64 | | Yes | No | No |

# Training ISP IPV6 Addressing Plan

**Table 13: Detail CS link WAN Region3**

| Block# | Prefix | Description | PTR Record | SOR | Registration |
|---|---|---|---|---|---|
| 37 | 2406:6400:0020:0000::/48 | WAN Prefix CS Link R7 Region3 | | No | Recommeded |
| | 2406:6400:0020:0000::/64 | R7[::1]-CAR3[::2] | Yes | No | No |
| | 2406:6400:0020:0001::/64 | | Yes | No | No |
| | 2406:6400:0020:0002::/64 | | Yes | No | No |
| | 2406:6400:0020:0003::/64 | | Yes | No | No |
| | 2406:6400:0020:0004::/64 | | Yes | No | No |
| | 2406:6400:0020:0005::/64 | | Yes | No | No |
| | 2406:6400:0020:0006::/64 | | Yes | No | No |
| | 2406:6400:0020:0007::/64 | | Yes | No | No |
| | 2406:6400:0020:0008::/64 | | Yes | No | No |
| | 2406:6400:0020:0009::/64 | | Yes | No | No |
| | 2406:6400:0020:000A::/64 | | Yes | No | No |
| | 2406:6400:0020:000B::/64 | | Yes | No | No |
| | 2406:6400:0020:000C::/64 | | Yes | No | No |
| | 2406:6400:0020:000D::/64 | | Yes | No | No |
| | 2406:6400:0020:000E::/64 | | Yes | No | No |
| | 2406:6400:0020:000F::/64 | | Yes | No | No |
| **Block#** | **Prefix** | **Description** | **PTR Record** | **SOR** | **Registration** |
| 38 | 2406:6400:0024:0000::/48 | WAN Prefix CS Link R9 Region3 | | No | Recommeded |
| | 2406:6400:0024:0000::/64 | R9[::1]-CBR3[::2] | Yes | No | No |
| | 2406:6400:0024:0001::/64 | | Yes | No | No |
| | 2406:6400:0024:0002::/64 | | Yes | No | No |
| | 2406:6400:0024:0003::/64 | | Yes | No | No |
| | 2406:6400:0024:0004::/64 | | Yes | No | No |
| | 2406:6400:0024:0005::/64 | | Yes | No | No |
| | 2406:6400:0024:0006::/64 | | Yes | No | No |
| | 2406:6400:0024:0007::/64 | | Yes | No | No |
| | 2406:6400:0024:0008::/64 | | Yes | No | No |
| | 2406:6400:0024:0009::/64 | | Yes | No | No |
| | 2406:6400:0024:000A::/64 | | Yes | No | No |
| | 2406:6400:0024:000B::/64 | | Yes | No | No |
| | 2406:6400:0024:000C::/64 | | Yes | No | No |
| | 2406:6400:0024:000D::/64 | | Yes | No | No |
| | 2406:6400:0024:000E::/64 | | Yes | No | No |
| | 2406:6400:0024:000F::/64 | | Yes | No | No |

# Training ISP IPV6 Addressing Plan

**Table 14: Detail CS link WAN Region 4**

| Block# | Prefix | Description | PTR Record | SOR | Registration |
|---|---|---|---|---|---|
| 42 | 2406:6400:0028:0000::/48 | WAN Prefix CS Link R10 Region4 | | No | Recommeded |
| | 2406:6400:0028:0000::/64 | R10[::1]-CAR4[::2] | Yes | No | No |
| | 2406:6400:0028:0001::/64 | | Yes | No | No |
| | 2406:6400:0028:0002::/64 | | Yes | No | No |
| | 2406:6400:0028:0003::/64 | | Yes | No | No |
| | 2406:6400:0028:0004::/64 | | Yes | No | No |
| | 2406:6400:0028:0005::/64 | | Yes | No | No |
| | 2406:6400:0028:0006::/64 | | Yes | No | No |
| | 2406:6400:0028:0007::/64 | | Yes | No | No |
| | 2406:6400:0028:0008::/64 | | Yes | No | No |
| | 2406:6400:0028:0009::/64 | | Yes | No | No |
| | 2406:6400:0028:000A::/64 | | Yes | No | No |
| | 2406:6400:0028:000B::/64 | | Yes | No | No |
| | 2406:6400:0028:000C::/64 | | Yes | No | No |
| | 2406:6400:0028:000D::/64 | | Yes | No | No |
| | 2406:6400:0028:000E::/64 | | Yes | No | No |
| | 2406:6400:0028:000F::/64 | | Yes | No | No |
| **Block#** | **Prefix** | **Description** | **PTR Record** | **SOR** | **Registration** |
| 43 | 2406:6400:002C:0000::/48 | WAN Prefix CS Link R12 Region4 | | No | Recommeded |
| | 2406:6400:002C:0000::/64 | R12[::1]-CBR4[::2] | Yes | No | No |
| | 2406:6400:002C:0001::/64 | | Yes | No | No |
| | 2406:6400:002C:0002::/64 | | Yes | No | No |
| | 2406:6400:002C:0003::/64 | | Yes | No | No |
| | 2406:6400:002C:0004::/64 | | Yes | No | No |
| | 2406:6400:002C:0005::/64 | | Yes | No | No |
| | 2406:6400:002C:0006::/64 | | Yes | No | No |
| | 2406:6400:002C:0007::/64 | | Yes | No | No |
| | 2406:6400:002C:0008::/64 | | Yes | No | No |
| | 2406:6400:002C:0009::/64 | | Yes | No | No |
| | 2406:6400:002C:000A::/64 | | Yes | No | No |
| | 2406:6400:002C:000B::/64 | | Yes | No | No |
| | 2406:6400:002C:000C::/64 | | Yes | No | No |
| | 2406:6400:002C:000D::/64 | | Yes | No | No |
| | 2406:6400:002C:000E::/64 | | Yes | No | No |
| | 2406:6400:002C:000F::/64 | | Yes | No | No |

# Training ISP IPV6 Addressing Plan

**Table 15: Customer block Region 1**

| Block# | Prefix | Description | Reverse DNS | SOR | Registration |
|---|---|---|---|---|---|
| 7 | 2406:6400:8000:0000::/35 | Customer block Region 1 | | | |
| | | | | | |
| | 2406:6400:8000:0000::/40 | Customer block POP1 [R1] | | >= /48 Yes | Yes |
| | *2406:6400:8100:0000::/40* | | | | |
| | 2406:6400:8200:0000::/40 | | | | |
| | 2406:6400:8300:0000::/40 | | | | |
| | 2406:6400:8400:0000::/40 | | | | |
| | 2406:6400:8500:0000::/40 | | | | |
| | 2406:6400:8600:0000::/40 | | | | |
| | 2406:6400:8700:0000::/40 | | | | |
| | 2406:6400:8800:0000::/40 | Customer block future use/POP | | >= /48 Yes | Yes |
| | *2406:6400:8900:0000::/40* | | | | |
| | 2406:6400:8A00:0000::/40 | | | | |
| | 2406:6400:8B00:0000::/40 | | | | |
| | 2406:6400:8C00:0000::/40 | | | | |
| | 2406:6400:8D00:0000::/40 | | | | |
| | 2406:6400:8E00:0000::/40 | | | | |
| | 2406:6400:8F00:0000::/40 | | | | |
| | 2406:6400:9000:0000::/40 | Customer block future use/POP | | >= /48 Yes | Yes |
| | 2406:6400:9100:0000::/40 | | | | |
| | 2406:6400:9200:0000::/40 | | | | |
| | 2406:6400:9300:0000::/40 | | | | |
| | 2406:6400:9400:0000::/40 | | | | |
| | 2406:6400:9500:0000::/40 | | | | |
| | 2406:6400:9600:0000::/40 | | | | |
| | 2406:6400:9700:0000::/40 | | | | |
| | 2406:6400:9800:0000::/40 | Customer block POP2 [R3] | | >= /48 Yes | Yes |
| | 2406:6400:9900:0000::/40 | | | | |
| | 2406:6400:9A00:0000::/40 | | | | |
| | 2406:6400:9B00:0000::/40 | | | | |
| | 2406:6400:9C00:0000::/40 | | | | |
| | 2406:6400:9D00:0000::/40 | | | | |
| | 2406:6400:9E00:0000::/40 | | | | |
| | 2406:6400:9F00:0000::/40 | | | | |

# Training ISP IPV6 Addressing Plan

| Table 16: Summarization oprions customer block Region 1 | | | |
|---|---|---|---|
| | | | |
| **Block#** | **Prefix** | **Description** | **Reverse Domain** |
| | 2406:6400:8000:0000::/35 | Customer block Region 1 [R2] | |
| | 2406:6400:8000:0000::/37 | Customer block POP1 [R1] | |
| | 2406:6400:8800:0000::/37 | Customer block future use/POP | |
| | 2406:6400:9000:0000::/37 | Customer block future use/POP | |
| | 2406:6400:9800:0000::/37 | Customer block POP2 [R3] | |

# Training ISP IPV6 Addressing Plan

**Table 17: Detail customer block Region 1**

| Block# | Prefix | Description | Reverse DNS | SOR | Registration |
|---|---|---|---|---|---|
| | 2406:6400:8000:0000::/40 | 1st Customer block POP1 [R1] | | | |
| | | | | | |
| | 2406:6400:8000:0000::/48 | 1st Customer prefix POP1 [R1] | | Yes | Yes |
| | 2406:6400:8001:0000::/48 | | | | |
| | 2406:6400:8002:0000::/48 | | | | |
| | 2406:6400:8003:0000::/48 | | | | |
| | 2406:6400:8004:0000::/48 | | | | |
| | 2406:6400:8005:0000::/48 | | | | |
| | 2406:6400:8006:0000::/48 | | | | |
| | 2406:6400:8007:0000::/48 | | | | |
| | | | | | |
| | 2406:6400:9800:0000::/40 | 1st Customer block POP2 [R3] | | | |
| | 2406:6400:9800:0000::/48 | 1st Customer prefix POP2 [R3] | | Yes | Yes |
| | 2406:6400:9801:0000::/48 | | | | |
| | 2406:6400:9802:0000::/48 | | | | |
| | 2406:6400:9803:0000::/48 | | | | |
| | 2406:6400:9804:0000::/48 | | | | |
| | 2406:6400:9805:0000::/48 | | | | |
| | 2406:6400:9806:0000::/48 | | | | |
| | 2406:6400:9807:0000::/48 | | | | |

# Training ISP IPV6 Addressing Plan

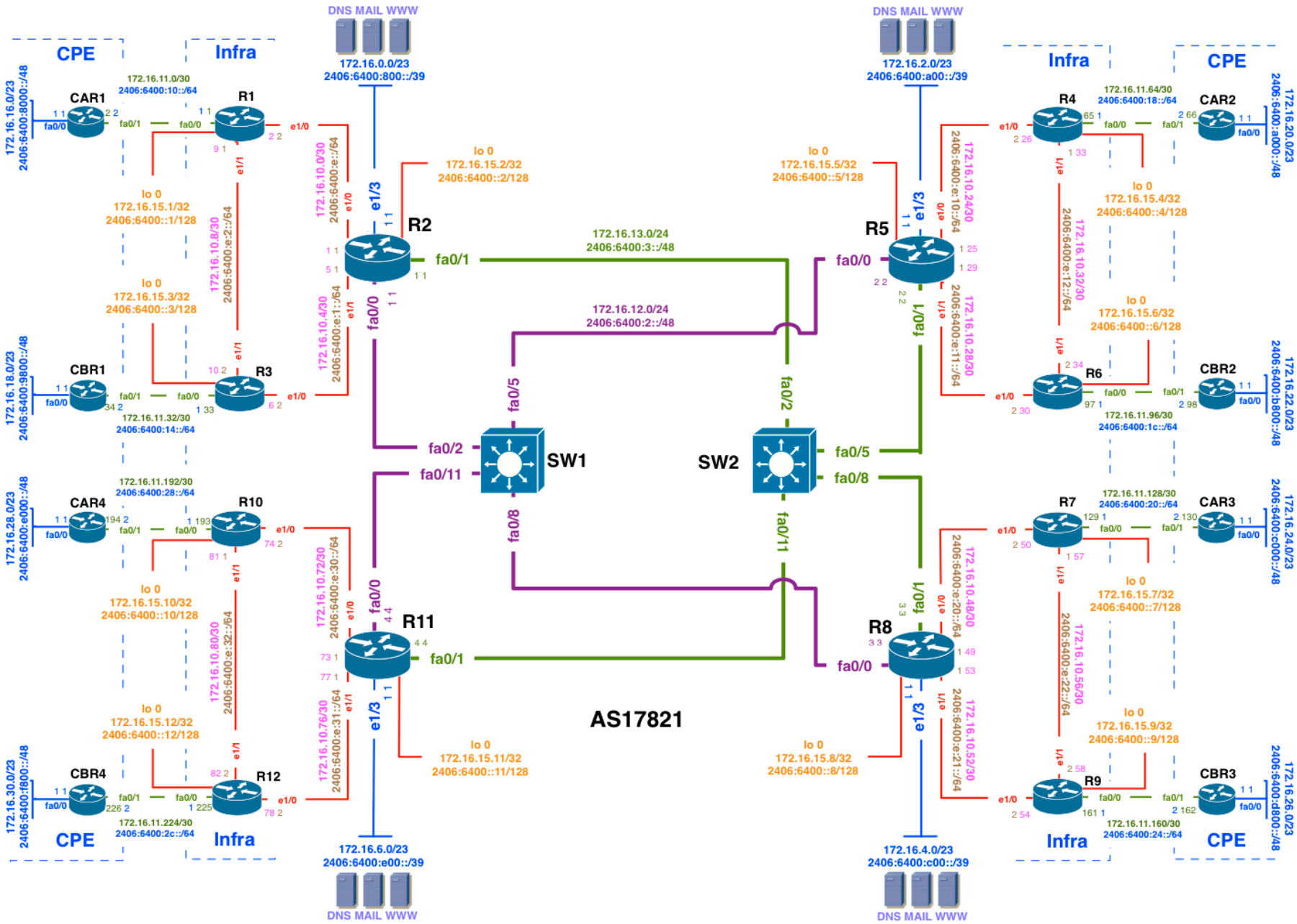

# Training ISP IPV6 Addressing Plan

**Table 18: Customer block Region 2**

| Block# | Prefix | Description | Reverse DNS | SOR | Registration |
|---|---|---|---|---|---|
| 8 | 2406:6400:a000:0000::/35 | Customer block Region 2 | | | |
| | | | | | |
| | 2406:6400:A000:0000::/40 | Customer block POP1 [R4] | | >= /48 Yes | Yes |
| | *2406:6400:A100:0000::/40* | | | | |
| | 2406:6400:A200:0000::/40 | | | | |
| | 2406:6400:A300:0000::/40 | | | | |
| | 2406:6400:A400:0000::/40 | | | | |
| | 2406:6400:A500:0000::/40 | | | | |
| | 2406:6400:A600:0000::/40 | | | | |
| | 2406:6400:A700:0000::/40 | | | | |
| | 2406:6400:A800:0000::/40 | Customer block future use/POP | | >= /48 Yes | Yes |
| | *2406:6400:A900:0000::/40* | | | | |
| | 2406:6400:AA00:0000::/40 | | | | |
| | 2406:6400:AB00:0000::/40 | | | | |
| | 2406:6400:AC00:0000::/40 | | | | |
| | 2406:6400:AD00:0000::/40 | | | | |
| | 2406:6400:AE00:0000::/40 | | | | |
| | 2406:6400:AF00:0000::/40 | | | | |
| | 2406:6400:B000:0000::/40 | Customer block future use/POP | | >= /48 Yes | Yes |
| | 2406:6400:B100:0000::/40 | | | | |
| | 2406:6400:B200:0000::/40 | | | | |
| | 2406:6400:B300:0000::/40 | | | | |
| | 2406:6400:B400:0000::/40 | | | | |
| | 2406:6400:B500:0000::/40 | | | | |
| | 2406:6400:B600:0000::/40 | | | | |
| | 2406:6400:B700:0000::/40 | | | | |
| | 2406:6400:B800:0000::/40 | Customer block POP2 [R6] | | >= /48 Yes | Yes |
| | 2406:6400:B900:0000::/40 | | | | |
| | 2406:6400:BA00:0000::/40 | | | | |
| | 2406:6400:BB00:0000::/40 | | | | |
| | 2406:6400:BC00:0000::/40 | | | | |
| | 2406:6400:BD00:0000::/40 | | | | |
| | 2406:6400:BE00:0000::/40 | | | | |
| | 2406:6400:BF00:0000::/40 | | | | |

# Training ISP IPV6 Addressing Plan

| Table 19: Summarization oprions customer block Region 2 | | | |
|---|---|---|---|
| | | | |
| **Block#** | **Prefix** | **Description** | **Reverse Domain** |
| | 2406:6400:A000:0000::/35 | Customer block Region 2 [R5] | |
| | 2406:6400:A000:0000::/37 | Customer block POP1 [R4] | |
| | 2406:6400:A800:0000::/37 | Customer block future use/POP | |
| | 2406:6400:B000:0000::/37 | Customer block future use/POP | |
| | 2406:6400:B800:0000::/37 | Customer block POP2 [R6] | |

# Training ISP IPV6 Addressing Plan

**Table 20: Detail customer block Region 2**

| Block# | Prefix | Description | Reverse DNS | SOR | Registration |
|---|---|---|---|---|---|
| | 2406:6400:A000:0000::/40 | 1st Customer block POP1 [R4] | | | |
| | | | | | |
| | 2406:6400:A000:0000::/48 | 1st Customer prefix POP1 [R4] | | Yes | Yes |
| | 2406:6400:A001:0000::/48 | | | | |
| | 2406:6400:A002:0000::/48 | | | | |
| | 2406:6400:A003:0000::/48 | | | | |
| | 2406:6400:A004:0000::/48 | | | | |
| | 2406:6400:A005:0000::/48 | | | | |
| | 2406:6400:A006:0000::/48 | | | | |
| | 2406:6400:A007:0000::/48 | | | | |
| | | | | | |
| | 2406:6400:B800:0000::/40 | 1st Customer block POP2 [R6] | | | |
| | 2406:6400:B800:0000::/48 | 1st Customer prefix POP2 [R6] | | Yes | Yes |
| | 2406:6400:B801:0000::/48 | | | | |
| | 2406:6400:B802:0000::/48 | | | | |
| | 2406:6400:B803:0000::/48 | | | | |
| | 2406:6400:B804:0000::/48 | | | | |
| | 2406:6400:B805:0000::/48 | | | | |
| | 2406:6400:B806:0000::/48 | | | | |
| | 2406:6400:B807:0000::/48 | | | | |

# Training ISP IPV6 Addressing Plan

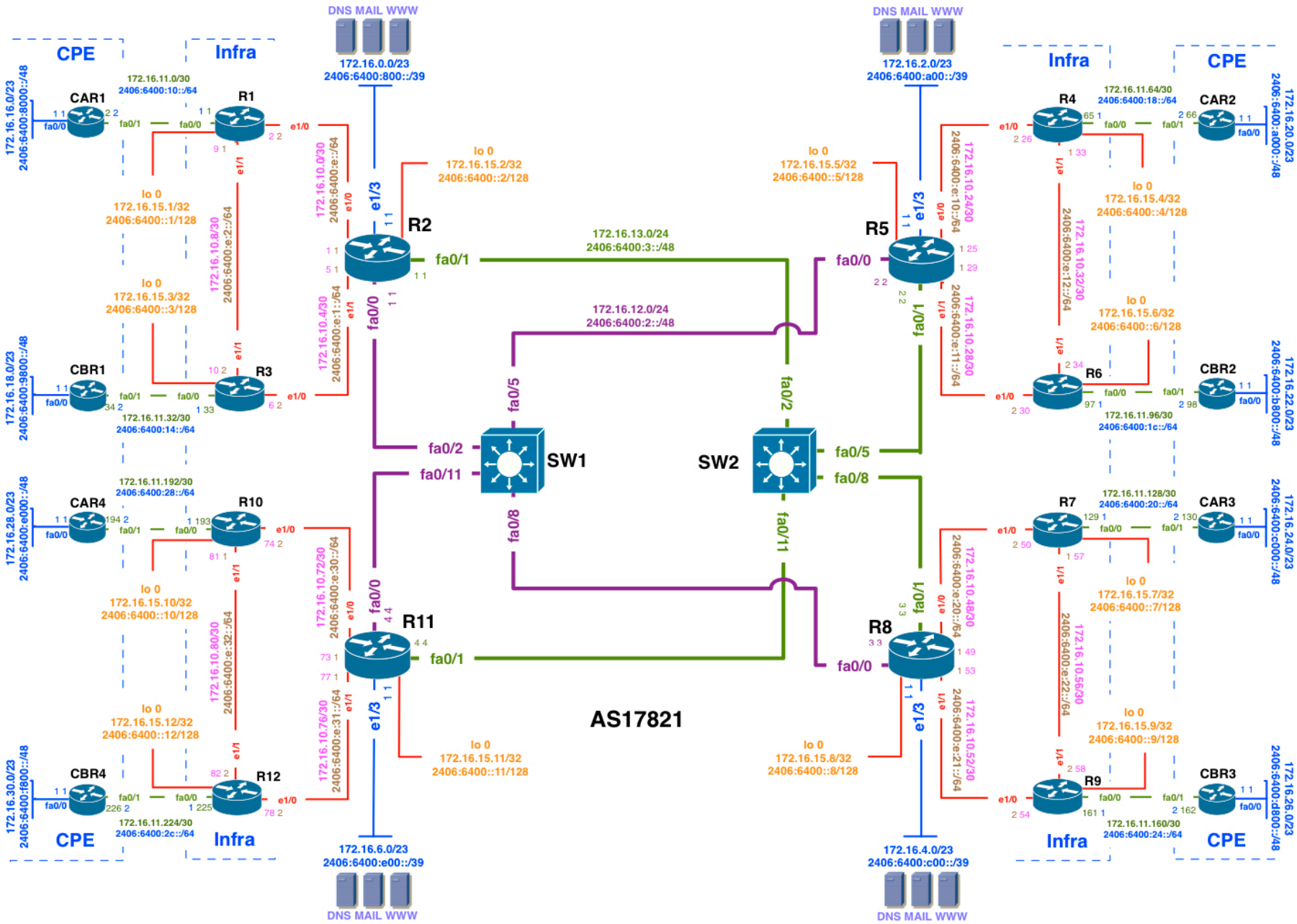

# Training ISP IPV6 Addressing Plan

**Table 21: Customer block Region 3**

| Block# | Prefix | Description | Reverse DNS | SOR | Registration |
|---|---|---|---|---|---|
| 9 | 2406:6400:c000:0000::/35 | Customer block Region 3 | | | |
| | | | | | |
| | 2406:6400:C000:0000::/40 | Customer block POP1 [R7] | | >= /48 Yes | Yes |
| | 2406:6400:C100:0000::/40 | | | | |
| | 2406:6400:C200:0000::/40 | | | | |
| | 2406:6400:C300:0000::/40 | | | | |
| | 2406:6400:C400:0000::/40 | | | | |
| | 2406:6400:C500:0000::/40 | | | | |
| | 2406:6400:C600:0000::/40 | | | | |
| | 2406:6400:C700:0000::/40 | | | | |
| | 2406:6400:C800:0000::/40 | Customer block future use/POP | | >= /48 Yes | Yes |
| | 2406:6400:C900:0000::/40 | | | | |
| | 2406:6400:CA00:0000::/40 | | | | |
| | 2406:6400:CB00:0000::/40 | | | | |
| | 2406:6400:CC00:0000::/40 | | | | |
| | 2406:6400:CD00:0000::/40 | | | | |
| | 2406:6400:CE00:0000::/40 | | | | |
| | 2406:6400:CF00:0000::/40 | | | | |
| | 2406:6400:D000:0000::/40 | Customer block future use/POP | | >= /48 Yes | Yes |
| | 2406:6400:D100:0000::/40 | | | | |
| | 2406:6400:D200:0000::/40 | | | | |
| | 2406:6400:D300:0000::/40 | | | | |
| | 2406:6400:D400:0000::/40 | | | | |
| | 2406:6400:D500:0000::/40 | | | | |
| | 2406:6400:D600:0000::/40 | | | | |
| | 2406:6400:D700:0000::/40 | | | | |
| | 2406:6400:D800:0000::/40 | Customer block POP2 [R9] | | >= /48 Yes | Yes |
| | 2406:6400:D900:0000::/40 | | | | |
| | 2406:6400:DA00:0000::/40 | | | | |
| | 2406:6400:DB00:0000::/40 | | | | |
| | 2406:6400:DC00:0000::/40 | | | | |
| | 2406:6400:DD00:0000::/40 | | | | |
| | 2406:6400:DE00:0000::/40 | | | | |
| | 2406:6400:DF00:0000::/40 | | | | |

# Training ISP IPV6 Addressing Plan

| Table 22: Summarization oprions customer block Region 3 | | | |
|---|---|---|---|
| | | | |
| **Block#** | **Prefix** | **Description** | **Reverse Domain** |
| | 2406:6400:c000:0000::/35 | Customer block Region 3 [R8] | |
| | 2406:6400:C000:0000::/37 | Customer block POP1 [R7] | |
| | 2406:6400:C800:0000::/37 | Customer block future use/POP | |
| | 2406:6400:D000:0000::/37 | Customer block future use/POP | |
| | 2406:6400:D800:0000::/37 | Customer block POP2 [R9] | |

# Training ISP IPV6 Addressing Plan

**Table 23: Detail customer block Region 3**

| Block# | Prefix | Description | Reverse DNS | SOR | Registration |
|---|---|---|---|---|---|
| | 2406:6400:C000:0000::/40 | 1st Customer block POP1 [R7] | | | |
| | | | | | |
| | 2406:6400:C000:0000::/48 | 1st Customer prefix POP1 [R7] | | Yes | Yes |
| | 2406:6400:C001:0000::/48 | | | | |
| | 2406:6400:C002:0000::/48 | | | | |
| | 2406:6400:C003:0000::/48 | | | | |
| | 2406:6400:C004:0000::/48 | | | | |
| | 2406:6400:C005:0000::/48 | | | | |
| | 2406:6400:C006:0000::/48 | | | | |
| | 2406:6400:C007:0000::/48 | | | | |
| | | | | | |
| | 2406:6400:D800:0000::/40 | 1st Customer block POP2 [R9] | | | |
| | 2406:6400:D800:0000::/48 | 1st Customer prefix POP2 [R9] | | Yes | Yes |
| | 2406:6400:D801:0000::/48 | | | | |
| | 2406:6400:D802:0000::/48 | | | | |
| | 2406:6400:D803:0000::/48 | | | | |
| | 2406:6400:D804:0000::/48 | | | | |
| | 2406:6400:D805:0000::/48 | | | | |
| | 2406:6400:D806:0000::/48 | | | | |
| | 2406:6400:D807:0000::/48 | | | | |

# Training ISP IPV6 Addressing Plan

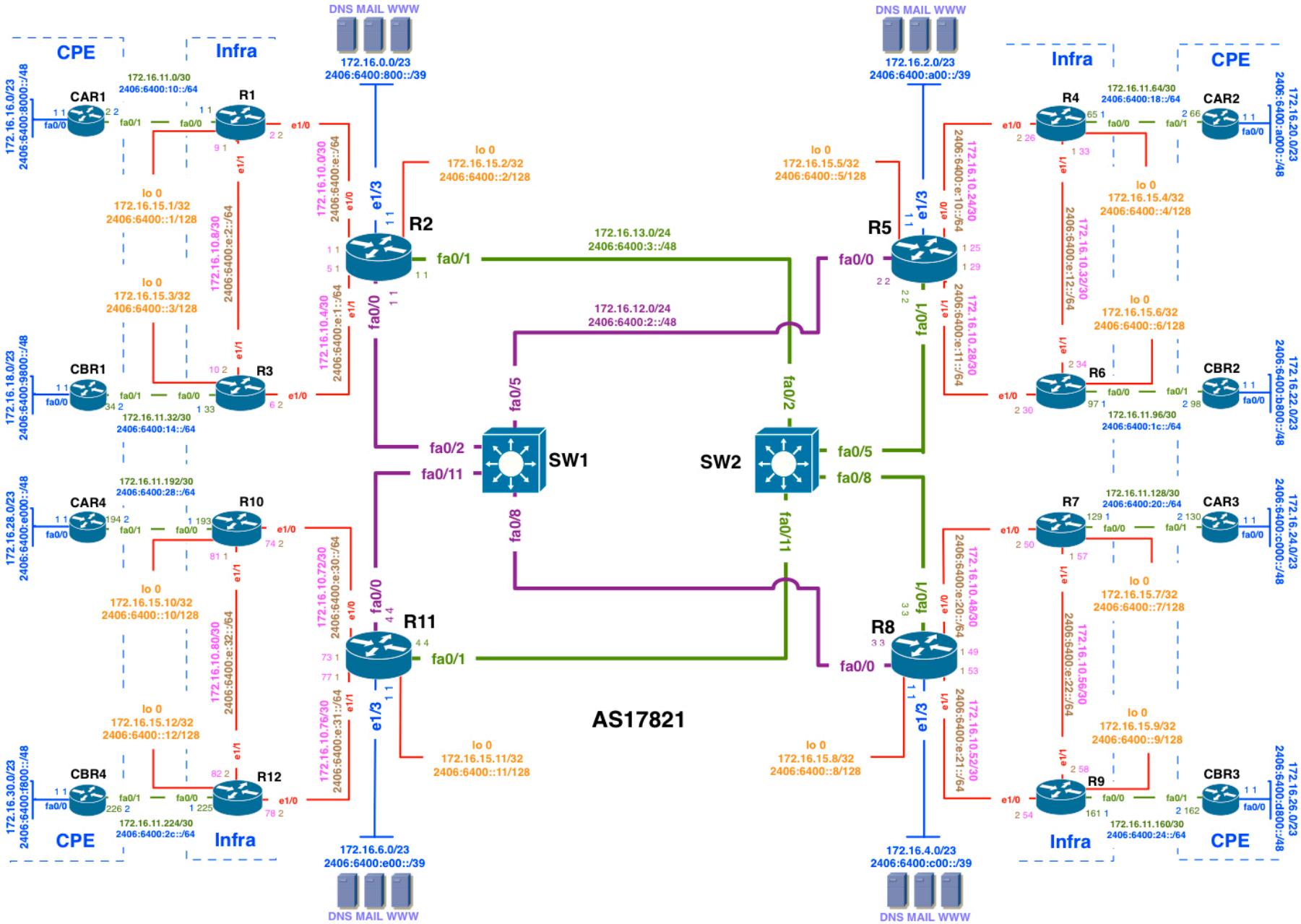

# Training ISP IPV6 Addressing Plan

**Table 24: Customer block Region 4**

| Block# | Prefix | Description | Reverse DNS | SOR | Registration |
|---|---|---|---|---|---|
| 10 | 2406:6400:e000:0000::/35 | Customer block Region 4 | | | |
| | | | | | |
| | 2406:6400:E000:0000::/40 | Customer block POP1 [R10] | | >= /48 Yes | Yes |
| | 2406:6400:E100:0000::/40 | | | | |
| | 2406:6400:E200:0000::/40 | | | | |
| | 2406:6400:E300:0000::/40 | | | | |
| | 2406:6400:E400:0000::/40 | | | | |
| | 2406:6400:E500:0000::/40 | | | | |
| | 2406:6400:E600:0000::/40 | | | | |
| | 2406:6400:E700:0000::/40 | | | | |
| | 2406:6400:E800:0000::/40 | Customer block future use/POP | | >= /48 Yes | Yes |
| | 2406:6400:E900:0000::/40 | | | | |
| | 2406:6400:EA00:0000::/40 | | | | |
| | 2406:6400:EB00:0000::/40 | | | | |
| | 2406:6400:EC00:0000::/40 | | | | |
| | 2406:6400:ED00:0000::/40 | | | | |
| | 2406:6400:EE00:0000::/40 | | | | |
| | 2406:6400:EF00:0000::/40 | | | | |
| | 2406:6400:F000:0000::/40 | Customer block future use/POP | | >= /48 Yes | Yes |
| | 2406:6400:F100:0000::/40 | | | | |
| | 2406:6400:F200:0000::/40 | | | | |
| | 2406:6400:F300:0000::/40 | | | | |
| | 2406:6400:F400:0000::/40 | | | | |
| | 2406:6400:F500:0000::/40 | | | | |
| | 2406:6400:F600:0000::/40 | | | | |
| | 2406:6400:F700:0000::/40 | | | | |
| | 2406:6400:F800:0000::/40 | Customer block POP2 [R12] | | >= /48 Yes | Yes |
| | 2406:6400:F900:0000::/40 | | | | |
| | 2406:6400:FA00:0000::/40 | | | | |
| | 2406:6400:FB00:0000::/40 | | | | |
| | 2406:6400:FC00:0000::/40 | | | | |
| | 2406:6400:FD00:0000::/40 | | | | |
| | 2406:6400:FE00:0000::/40 | | | | |
| | 2406:6400:FF00:0000::/40 | | | | |

# Training ISP IPV6 Addressing Plan

| Table 25: Summarization oprions customer block Region 4 | | | |
|---|---|---|---|
| | | | |
| **Block#** | **Prefix** | **Description** | **Reverse Domain** |
| | 2406:6400:e000:0000::/35 | Customer block Region 4 [R11] | |
| | 2406:6400:E000:0000::/37 | Customer block POP1 [R10] | |
| | 2406:6400:E800:0000::/37 | Customer block future use/POP | |
| | 2406:6400:F000:0000::/37 | Customer block future use/POP | |
| | 2406:6400:F800:0000::/37 | Customer block POP2 [R12] | |

# Training ISP IPV6 Addressing Plan

**Table 26: Detail customer block Region 4**

| Block# | Prefix | Description | Reverse DNS | SOR | Registration |
|---|---|---|---|---|---|
| | 2406:6400:E000:0000::/40 | 1st Customer block POP1 [R10] | | | |
| | | | | | |
| | 2406:6400:E000:0000::/48 | 1st Customer prefix POP1 [R10] | | Yes | Yes |
| | 2406:6400:E001:0000::/48 | | | | |
| | 2406:6400:E002:0000::/48 | | | | |
| | 2406:6400:E003:0000::/48 | | | | |
| | 2406:6400:E004:0000::/48 | | | | |
| | 2406:6400:E005:0000::/48 | | | | |
| | 2406:6400:E006:0000::/48 | | | | |
| | 2406:6400:E007:0000::/48 | | | | |
| | | | | | |
| | 2406:6400:F800:0000::/40 | 1st Customer block POP2 [R10] | | | |
| | 2406:6400:F800:0000::/48 | 1st Customer prefix POP2 [R10] | | Yes | Yes |
| | 2406:6400:F801:0000::/48 | | | | |
| | 2406:6400:F802:0000::/48 | | | | |
| | 2406:6400:F803:0000::/48 | | | | |
| | 2406:6400:F804:0000::/48 | | | | |
| | 2406:6400:F805:0000::/48 | | | | |
| | 2406:6400:F806:0000::/48 | | | | |
| | 2406:6400:F807:0000::/48 | | | | |

# Training ISP IPV6 Addressing Plan

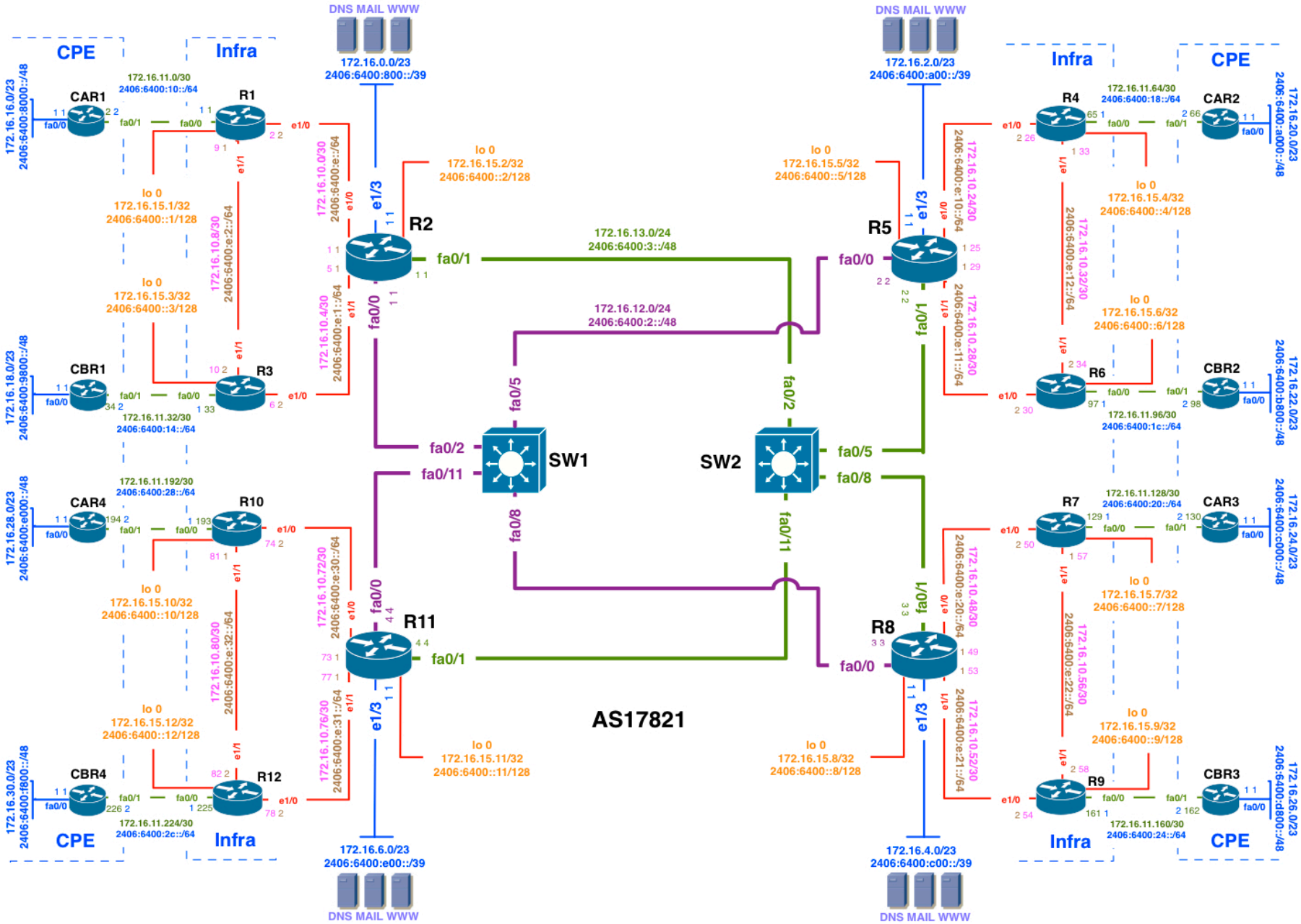

# Training ISP IPV4 Addressing Plan

**Summary parent block IPV4**

| Block# | Prefix | Size | Description |
|---|---|---|---|
| 1 | 172.16.0.0 | /19 | Parent block |
| 2 | 172.16.0.0 | /20 | Infrastructure |
| 3 | 172.16.16.0 | /20 | Customer network |

# Training ISP IPV4 Addressing Plan

**Detail DC infrastructure block IPV4**

| Block# | Prefix | Size | Description | SOR | Register |
|---|---|---|---|---|---|
| 2 | 172.16.0.0 | /20 | Infrastructure | | |
| | | | | | |
| 4 | 172.16.0.0 | /23 | Router2 DC summary net | | |
| 5 | 172.16.0.0 | /24 | Router2 DC | No | Recommended |
| | | | | | |
| 6 | 172.16.2.0 | /23 | Router5 DC summary net | | |
| 7 | 172.16.2.0 | /24 | Router5 DC | No | Recommended |
| | | | | | |
| 8 | 172.16.4.0 | /23 | Router8 DC summary net | | |
| 9 | 172.16.4.0 | /24 | Router8 DC | No | Recommended |
| | | | | | |
| 10 | 172.16.6.0 | /23 | Router11 DC summary net | | |
| 11 | 172.16.6.0 | /24 | Router11 DC | No | Recommended |

# Training ISP IPV4 Addressing Plan

**Detail infrastructure WAN block IPV4**

| | | | | | |
|---|---|---|---|---|---|
| 12 | 172.16.10.0 | /24 | WAN prefix | | Optional |
| 13 | 172.16.10.0 | /30 | Router2-1 WAN | No | |
| 14 | 172.16.10.4 | /30 | Router2-3 WAN | No | |
| 15 | 172.16.10.8 | /30 | Router1-3 WAN | No | |
| | | | | | |
| 16 | 172.16.10.24 | /30 | Router5-4 WAN | No | |
| 17 | 172.16.10.28 | /30 | Router5-6 WAN | No | |
| 18 | 172.16.10.32 | /30 | Router4-6 WAN | No | |
| | | | | | |
| 19 | 172.16.10.48 | /30 | Router8-7 WAN | No | |
| 20 | 172.16.10.52 | /30 | Router8-9 WAN | No | |
| 21 | 172.16.10.56 | /30 | Router7-9 WAN | No | |
| | | | | | |
| 22 | 172.16.10.72 | /30 | Router11-10 WAN | No | |
| 23 | 172.16.10.76 | /30 | Router11-12 WAN | No | |
| 24 | 172.16.10.80 | /30 | Router10-12 WAN | No | |

# Training ISP IPV4 Addressing Plan

**Detail customer link WAN block**

| Block# | Prefix | Size | Description | SOR | Register |
|---|---|---|---|---|---|
| | 172.16.11.0 | /26 | WAN CS Link Region1 | | |
| | 172.16.11.0 | /27 | WAN CS Link POP1 [R1] | | |
| | 172.16.11.0 | /30 | R1[::1]-CAR1[::2] | No | No |
| | 172.16.11.4 | /30 | | | |
| | 172.16.11.32 | /27 | WAN CS Link POP2 [R3] | | |
| | 172.16.11.32 | /30 | R3[::33]-CBR1[::34] | No | No |
| | 172.16.11.36 | /30 | | | |
| | | | | | |
| | 172.16.11.64 | /26 | WAN CS Link Region2 | | |
| | 172.16.11.64 | /27 | WAN CS Link POP1 [R4] | | |
| | 172.16.11.64 | /30 | R4[::65]-CAR2[::66] | No | No |
| | 172.16.11.68 | /30 | | | |
| | 172.16.11.96 | /27 | WAN CS Link POP2 [R6] | | |
| | 172.16.11.96 | /30 | R6[::97]-CBR2[::98] | No | No |
| | 172.16.11.100 | /30 | | | |
| | | | | | |
| | 172.16.11.128 | /26 | WAN CS Link Region3 | | |
| | 172.16.11.128 | /27 | WAN CS Link POP1 [R7] | | |
| | 172.16.11.128 | /30 | R7[::129]-CAR3[::130] | No | No |
| | 172.16.11.132 | /30 | | | |
| | 172.16.11.160 | /27 | WAN CS Link POP2 [R9] | | |
| | 172.16.11.160 | /30 | R9[::161]-CBR3[::162] | No | No |
| | 172.16.11.164 | /30 | | | |
| | | | | | |
| | 172.16.11.192 | /26 | WAN CS Link Region4 | | |
| | 172.16.11.192 | /27 | WAN CS Link POP1 [R10] | | |
| | 172.16.11.192 | /30 | R10[::193]-CAR4[::194] | No | No |
| | 172.16.11.196 | /30 | | | |
| | 172.16.11.224 | /27 | WAN CS Link POP2 [R12] | | |
| | 172.16.11.224 | /30 | R12[::225]-CBR4[::226] | No | No |
| | 172.16.11.228 | /30 | | | |

# Training ISP IPV4 Addressing Plan

**Detail infrastructure block Transport & Loopback IPV4**

| | | | | | |
|---|---|---|---|---|---|
| 25 | 172.16.12.0 | /24 | Transport link PURPLE | No | |
| 26 | 172.16.13.0 | /24 | Transport link GREEN | No | |
| | | | | | |
| 27 | 172.16.15.0 | /24 | Loopback | No | |

# Training ISP IPV4 Addressing Plan

**Detail customer block**

| Block# | Prefix | Size | Description | SOR | Register |
|---|---|---|---|---|---|
| 28 | 172.16.6.0 | /20 | Customer network | | |
| | | | | | |
| 29 | 172.16.16.0 | /22 | Router2 summary net | | |
| 30 | 172.16.16.0 | /23 | Router1 CS network | Yes | Must |
| 31 | 172.16.18.0 | /23 | Router3 CS network | Yes | Must |
| | | | | | |
| 32 | 172.16.20.0 | /22 | Router5 summary net | | |
| 33 | 172.16.20.0 | /23 | Router4 CS network | Yes | Must |
| 34 | 172.16.22.0 | /23 | Router6 CS network | Yes | Must |
| | | | | | |
| 35 | 172.16.24.0 | /22 | Router8 summary net | | |
| 36 | 172.16.24.0 | /23 | Router7 CS network | Yes | Must |
| 37 | 172.16.26.0 | /23 | Router9 CS network | Yes | Must |
| | | | | | |
| 38 | 172.16.28.0 | /22 | Router11 summary net | | |
| 39 | 172.16.28.0 | /23 | Router10 CS network | Yes | Must |
| 40 | 172.16.30.0 | /23 | Router12 CS network | Yes | Must |

# Training ISP IPV4 Addressing Plan

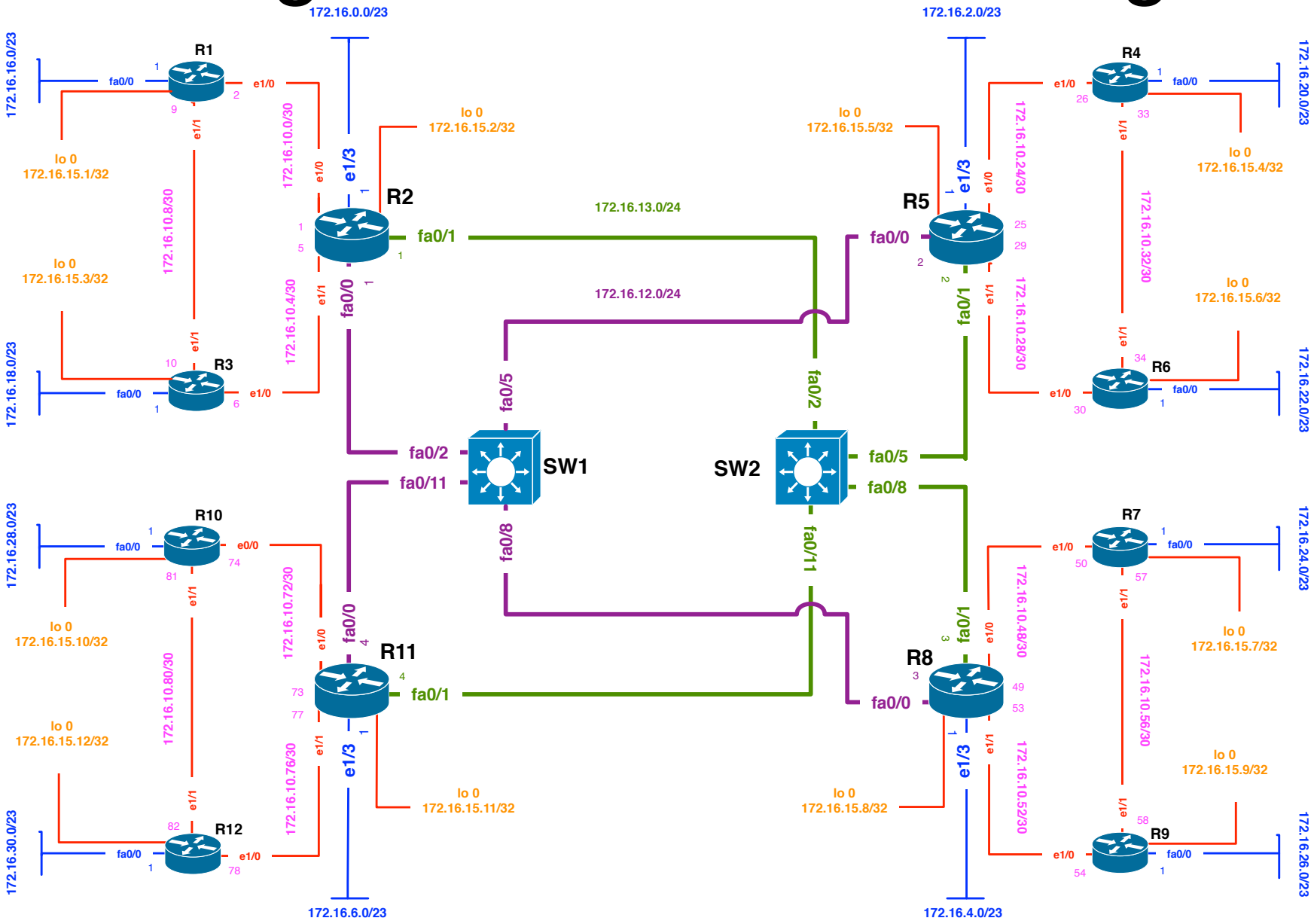


Training ISP IPv4 Address Plan

# Route Filtering

- Types of prefixes in IP core network:
  - Internal Prefixes
  - External prefixes
    - Downstream customers
    - Internet prefixes

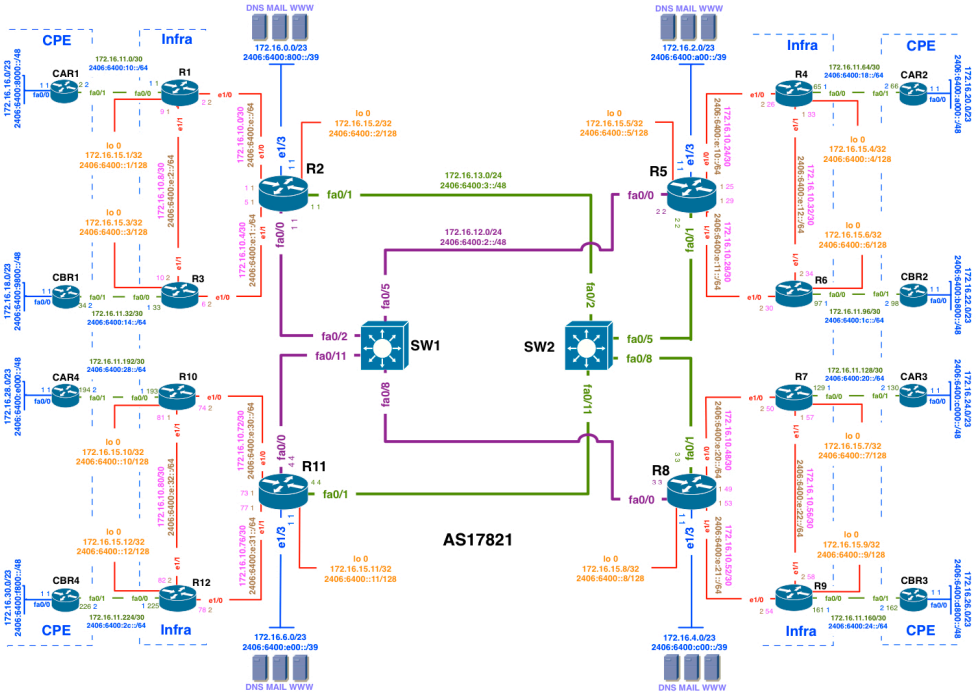

# Route Filtering

- Internal prefixes originated in IP core network
  - Loopback
  - Transport
    - Connect inter-regional networks
  - Point-to-point
    - Infrastructure point-to-point
    - Customer side point-to-point
  - Data centre
    - Some ISP originate from separate AS if it is a large public hosting operation and multihome DC

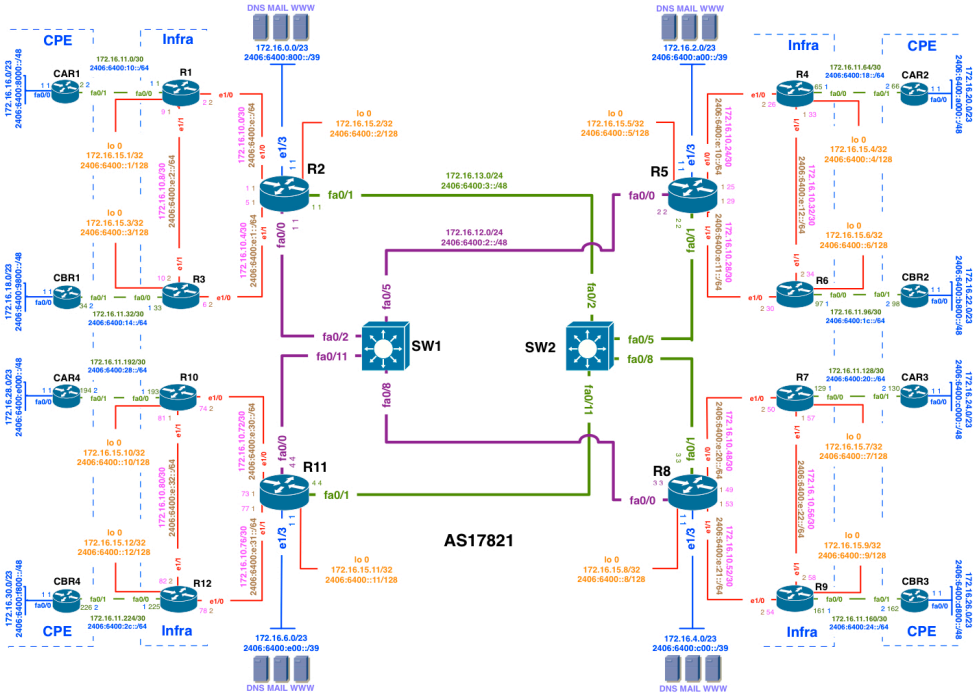

# Route Filtering

- Loopback Prefix
  - Prefix size /128
  - Advertised in IGP i.e. OSPF
  - Scope within IP core network
    - Can be summarize in IGP i.e. OSPF if the number of loopback prefixes are large within the region

# Route Filtering

Loopback prefixes in Training ISP network:

```
Router1#sh ipv6 route
IPv6 Routing Table - default - 51 entries
Codes: C - Connected, L - Local, S - Static, U - Per-user Static route
       B - BGP, HA - Home Agent, MR - Mobile Router, R - RIP
       I1 - ISIS L1, I2 - ISIS L2, IA - ISIS interarea, IS - ISIS summary
       D - EIGRP, EX - EIGRP external, ND - Neighbor Discovery, I - LISP
       O - OSPF Intra, OI - OSPF Inter, OE1 - OSPF ext 1, OE2 - OSPF ext 2
       ON1 - OSPF NSSA ext 1, ON2 - OSPF NSSA ext 2

LC  2406:6400::1/128 [0/0]
     via Loopback0, receive
OI  2406:6400::2/128 [110/10]
     via FE80::C801:1FF:FEAE:1C, Ethernet1/0
O   2406:6400::3/128 [110/10]
     via FE80::C802:1FF:FEAE:1D, Ethernet1/1
OI  2406:6400::4/128 [110/21]
     via FE80::C801:1FF:FEAE:1C, Ethernet1/0
OI  2406:6400::5/128 [110/11]
     via FE80::C801:1FF:FEAE:1C, Ethernet1/0
OI  2406:6400::6/128 [110/21]
     via FE80::C801:1FF:FEAE:1C, Ethernet1/0
OI  2406:6400::7/128 [110/21]
     via FE80::C801:1FF:FEAE:1C, Ethernet1/0
OI  2406:6400::8/128 [110/11]
     via FE80::C801:1FF:FEAE:1C, Ethernet1/0
OI  2406:6400::9/128 [110/21]
     via FE80::C801:1FF:FEAE:1C, Ethernet1/0
OI  2406:6400::10/128 [110/21]
     via FE80::C801:1FF:FEAE:1C, Ethernet1/0
OI  2406:6400::11/128 [110/11]
     via FE80::C801:1FF:FEAE:1C, Ethernet1/0
OI  2406:6400::12/128 [110/21]
     via FE80::C801:1FF:FEAE:1C, Ethernet1/0
```

# Route Filtering

- Transport Prefix
  - Prefix size can be /64~/48
  - /48 is preferred if BGP traffic engineering required in future
  - Advertised in IGP i.e. OSPF
  - Scope within IP core network

# Route Filtering

Transport prefixes in Training ISP network:

```
Router1#sh ipv6 route
IPv6 Routing Table - default - 51 entries
Codes: C - Connected, L - Local, S - Static, U - Per-user Static route
       B - BGP, HA - Home Agent, MR - Mobile Router, R - RIP
       I1 - ISIS L1, I2 - ISIS L2, IA - ISIS interarea, IS - ISIS summary
       D - EIGRP, EX - EIGRP external, ND - Neighbor Discovery, I - LISP
       O - OSPF Intra, OI - OSPF Inter, OE1 - OSPF ext 1, OE2 - OSPF ext 2
       ON1 - OSPF NSSA ext 1, ON2 - OSPF NSSA ext 2
```

```
OI  2406:6400:2::/48 [110/11]
     via FE80::C801:1FF:FEAE:1C, Ethernet1/0
OI  2406:6400:3::/48 [110/11]
     via FE80::C801:1FF:FEAE:1C, Ethernet1/0
```

# Route Filtering

- Prefixes advertised/originated in IP core network
  - Point-to-point
    - Infrastructure point-to-point
      - Prefix size /64 [/127 on interface configuration according to rfc-6164]
      - Advertised in IGP i.e. OSPF
      - Scope within IP core network
      - Can be summarize in IGP i.e. OSPF if the number of p-to-p prefixes are large within the region
    - Customer side point-to-point
      - Prefix size /64 [/127 on interface configuration according to rfc-6164]
      - Advertise from EGP i.e. iBGP (Not OSPF)
      - Scope within IP core network
      - Summarization in iBGP using network statement and pull up route [Atomic summarization]

# Route Filtering

Infrastructure p-to-p prefixes in Training ISP network:

```
Router1#sh ipv6 route
IPv6 Routing Table - default - 51 entries
Codes: C - Connected, L - Local, S - Static, U - Per-user Static route
       B - BGP, HA - Home Agent, MR - Mobile Router, R - RIP
       I1 - ISIS L1, I2 - ISIS L2, IA - ISIS interarea, IS - ISIS summary
       D - EIGRP, EX - EIGRP external, ND - Neighbor Discovery, I - LISP
       O - OSPF Intra, OI - OSPF Inter, OE1 - OSPF ext 1, OE2 - OSPF ext 2
       ON1 - OSPF NSSA ext 1, ON2 - OSPF NSSA ext 2

C   2406:6400:E::/64 [0/0]
    via Ethernet1/0, directly connected
O   2406:6400:E:1::/64 [110/20]
    via FE80::C802:1FF:FEAE:1D, Ethernet1/1
    via FE80::C801:1FF:FEAE:1C, Ethernet1/0
C   2406:6400:E:2::/64 [0/0]
    via Ethernet1/1, directly connected
OI  2406:6400:E:10::/64 [110/21]
    via FE80::C801:1FF:FEAE:1C, Ethernet1/0
OI  2406:6400:E:11::/64 [110/21]
    via FE80::C801:1FF:FEAE:1C, Ethernet1/0
OI  2406:6400:E:12::/64 [110/31]
    via FE80::C801:1FF:FEAE:1C, Ethernet1/0
OI  2406:6400:E:20::/64 [110/21]
    via FE80::C801:1FF:FEAE:1C, Ethernet1/0
OI  2406:6400:E:21::/64 [110/21]
    via FE80::C801:1FF:FEAE:1C, Ethernet1/0
OI  2406:6400:E:22::/64 [110/31]
    via FE80::C801:1FF:FEAE:1C, Ethernet1/0
OI  2406:6400:E:30::/64 [110/21]
    via FE80::C801:1FF:FEAE:1C, Ethernet1/0
OI  2406:6400:E:31::/64 [110/21]
    via FE80::C801:1FF:FEAE:1C, Ethernet1/0
OI  2406:6400:E:32::/64 [110/31]
    via FE80::C801:1FF:FEAE:1C, Ethernet1/0
```

# Route Filtering

Customer p-to-p prefixes in Training ISP network:

```
Router1#sh ipv6 route
IPv6 Routing Table - default - 51 entries
Codes: C - Connected, L - Local, S - Static, U - Per-user Static route
       B - BGP, HA - Home Agent, MR - Mobile Router, R - RIP
       I1 - ISIS L1, I2 - ISIS L2, IA - ISIS interarea, IS - ISIS summary
       D - EIGRP, EX - EIGRP external, ND - Neighbor Discovery, I - LISP
       O - OSPF Intra, OI - OSPF Inter, OE1 - OSPF ext 1, OE2 - OSPF ext 2
       ON1 - OSPF NSSA ext 1, ON2 - OSPF NSSA ext 2

S   2406:6400:10::/48 [1/0]
    via Null0, directly connected
B   2406:6400:14::/48 [200/0]
    via 2406:6400::3
B   2406:6400:18::/48 [200/0]
    via 2406:6400::4
B   2406:6400:1C::/48 [200/0]
    via 2406:6400::6
B   2406:6400:20::/48 [200/0]
    via 2406:6400::7
B   2406:6400:24::/48 [200/0]
    via 2406:6400::9
B   2406:6400:28::/48 [200/0]
    via 2406:6400::10
B   2406:6400:2C::/48 [200/0]
    via 2406:6400::12
```

# Route Filtering

- Data Centre Prefix
  - Prefix assignment can be /48 or a number of /48 if need more
  - /48 is preferred as it will support specific BGP network advertisement for traffic engineering purpose
  - Usually advertised in iBGP but ISP can prefer to advertise from separate AS using eBGP if DC is multihome, has separate routing policy then IP core and providing public hosting service
  - Scope within IP core network if single home
  - For multihoming case origin AS is different and ISP will allow transit only

# Route Filtering

Data center prefixes in Training ISP network:

```
IPv6 Routing Table - default - 51 entries
Codes: C - Connected, L - Local, S - Static, U - Per-user Static route
       B - BGP, HA - Home Agent, MR - Mobile Router, R - RIP
       I1 - ISIS L1, I2 - ISIS L2, IA - ISIS interarea, IS - ISIS summary
       D - EIGRP, EX - EIGRP external, ND - Neighbor Discovery, I - LISP
       O - OSPF Intra, OI - OSPF Inter, OE1 - OSPF ext 1, OE2 - OSPF ext 2
       ON1 - OSPF NSSA ext 1, ON2 - OSPF NSSA ext 2

B   2406:6400:800::/48 [200/0]
    via 2406:6400::2
B   2406:6400:A00::/48 [200/0]
    via 2406:6400::5
B   2406:6400:C00::/48 [200/0]
    via 2406:6400::8
B   2406:6400:E00::/48 [200/0]
    via 2406:6400::11
```

# Receiving Prefixes

- There are three scenarios for receiving prefixes from other ASNs
  - Customer talking BGP
  - Peer talking BGP
  - Upstream/Transit talking BGP
- Each has different filtering requirements and need to be considered separately

# Receiving Prefixes: From Customers

- ISPs should only accept prefixes which have been assigned or allocated to their downstream customer
- If ISP has assigned address space to its customer, then the customer IS entitled to announce it back to his ISP
- If the ISP has NOT assigned address space to its customer, then:
  - Check in the five RIR databases to see if this address space really has been assigned to the customer. **L**egitimacy of **A**ddress (LoA) check
  - The tool: whois –h jwhois.apnic.net x.x.x.0/24
    - (jwhois queries all RIR database)

# Receiving Prefixes: From Customers

- Example use of whois to check if customer is entitled to announce address space:

```
$ whois -h whois.apnic.net 2406:6400::/32

Inet6num:       2406:6400::/32
netname:        APNIC-AP
descr:          Asia Pacific Network Information Centre
descr:          Regional Internet Registry for the Asia-Pacific
descr:          6 Cordelia Street
descr:          South Brisbane, QLD 4101
descr:          Australia
country:        AU
admin-c:        AIC1-AP
tech-c:         NO4-AP
mnt-by:         APNIC-HM
mnt-irt:        IRT-APNIC-AP
changed:        hm-changed@apnic.net
status:         ASSIGNED PORTABLE
changed:        hm-changed@apnic.net 20110309
source:         APNIC
```

Portable – means its an assignment to the customer, the customer can announce it to you

# Receiving Prefixes: From Peers

- A peer is an ISP with whom you agree to exchange prefixes you originate into the Internet routing table
  - Prefixes you accept from a peer are only those they have indicated they will announce
  - Prefixes you announce to your peer are only those you have indicated you will announce

# Receiving Prefixes: From Peers

- Agreeing what each will announce to the other:
  - Exchange of e-mail documentation as part of the peering agreement, and then ongoing updates

    OR

  - Use of the Internet Routing Registry and configuration tools such as the IRRToolSet

www.isc.org/sw/IRRToolSet/

  - New initiative Resource Certification (RPKI)

http://www.apnic.net/services/services-apnic-provides/resource-certification

# Receiving Prefixes: From Upstream

- Upstream/Transit Provider is an ISP who you pay to give you transit to the WHOLE Internet
- Receiving prefixes from them is not desirable unless really necessary
  - Traffic Engineering – see BGP Multihoming presentations
- Ask upstream/transit provider to either:
  - originate a default-route

    OR
  - announce one prefix you can use as default

# Route Filtering Case study

- External Prefixes
  - Customer prefix coming from downstream
  - Internet prefix coming from the upstream

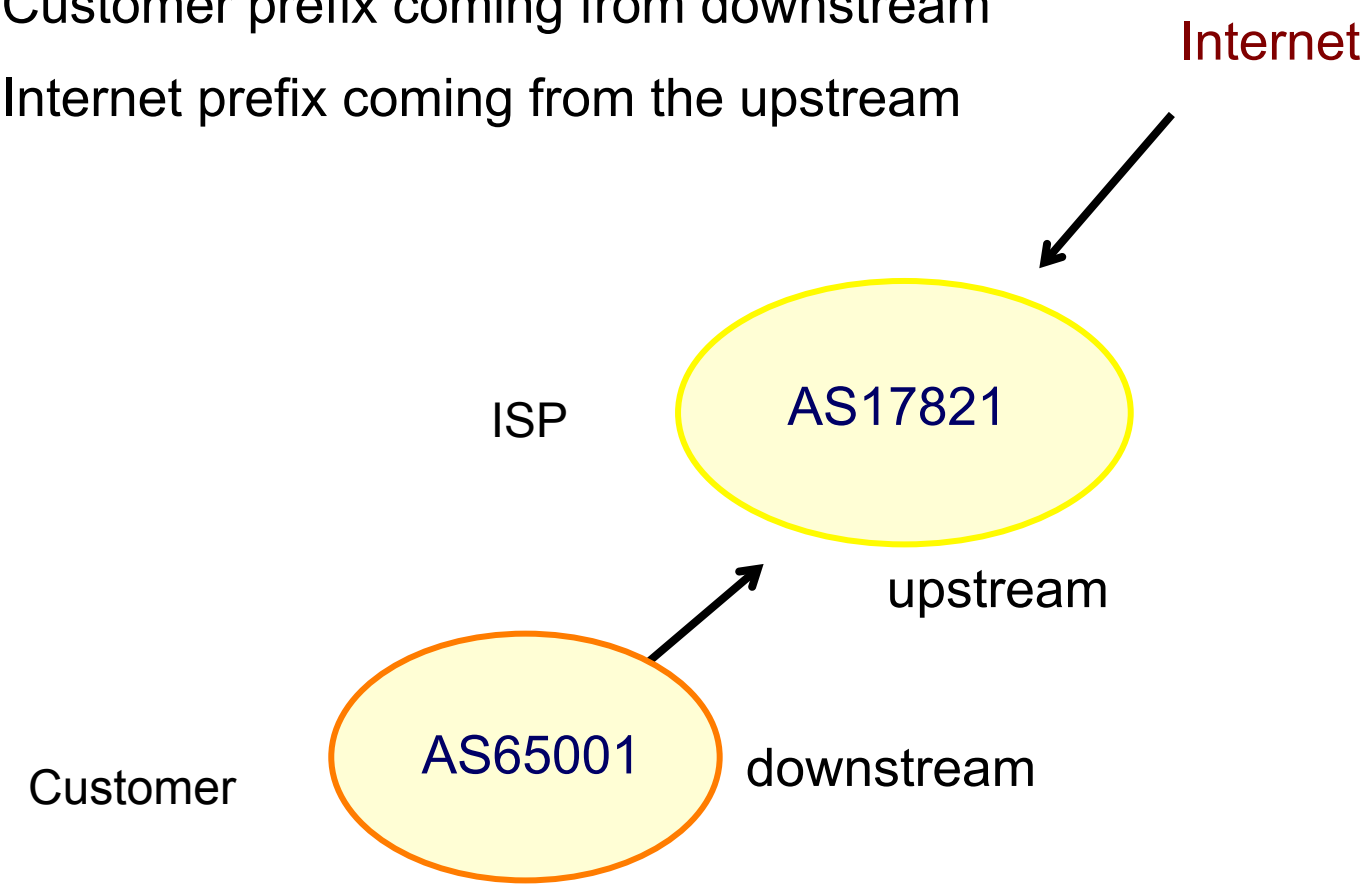

# Route Filtering

Downstream customer prefixes in Training ISP network:

```
Router1#sh ipv6 route
IPv6 Routing Table - default - 51 entries
Codes: C - Connected, L - Local, S - Static, U - Per-user Static route
       B - BGP, HA - Home Agent, MR - Mobile Router, R - RIP
       I1 - ISIS L1, I2 - ISIS L2, IA - ISIS interarea, IS - ISIS summary
       D - EIGRP, EX - EIGRP external, ND - Neighbor Discovery, I - LISP
       O - OSPF Intra, OI - OSPF Inter, OE1 - OSPF ext 1, OE2 - OSPF ext 2
       ON1 - OSPF NSSA ext 1, ON2 - OSPF NSSA ext 2

B   2406:6400:8000::/48 [20/0]
    via FE80::C80C:1FF:FEAF:6, FastEthernet0/0
B   2406:6400:9800::/48 [200/0]
    via 2406:6400::3
B   2406:6400:A000::/48 [200/0]
    via 2406:6400::4
B   2406:6400:B800::/48 [200/0]
    via 2406:6400::6
B   2406:6400:C000::/48 [200/0]
    via 2406:6400::7
B   2406:6400:D800::/48 [200/0]
    via 2406:6400::9
B   2406:6400:E000::/48 [200/0]
    via 2406:6400::10
B   2406:6400:F800::/48 [200/0]
    via 2406:6400::12
```

# Route Filtering

Upstream Internet prefixes in Training ISP network:

```
Router1#sh ipv6 route
IPv6 Routing Table - default - 51 entries
Codes: C - Connected, L - Local, S - Static, U - Per-user Static route
       B - BGP, HA - Home Agent, MR - Mobile Router, R - RIP
       I1 - ISIS L1, I2 - ISIS L2, IA - ISIS interarea, IS - ISIS summary
       D - EIGRP, EX - EIGRP external, ND - Neighbor Discovery, I - LISP
       O - OSPF Intra, OI - OSPF Inter, OE1 - OSPF ext 1, OE2 - OSPF ext 2
       ON1 - OSPF NSSA ext 1, ON2 - OSPF NSSA ext 2

B   2406:6400:8000::/48 [20/0]
    via FE80::C80C:1FF:FEAF:6, FastEthernet0/0
B   2406:6400:9800::/48 [200/0]
    via 2406:6400::3
B   2406:6400:A000::/48 [200/0]
    via 2406:6400::4
B   2406:6400:B800::/48 [200/0]
    via 2406:6400::6
B   2406:6400:C000::/48 [200/0]
    via 2406:6400::7
B   2406:6400:D800::/48 [200/0]
    via 2406:6400::9
B   2406:6400:E000::/48 [200/0]
    via 2406:6400::10
B   2406:6400:F800::/48 [200/0]
    via 2406:6400::12
```

# Route Filtering

- Customer prefix coming from downstream:
  - Option 1: Customer single home and non portable prefix
    - Customer is not APNIC member prefix received from upstream ISP
  - Option 2: Customer single home and portable prefix
    - Customer is APNIC member receive allocation as service provider but no AS number yet
  - Option 3: Customer multihome and non portable prefix
    - Customer is not APNIC member both prefix and ASN received from upstream ISP
  - Option 4: Customer multihome and portable prefix
    - Customer is APNIC member both prefix and ASN received from APNIC

# Route Filtering

- Option 1: Customer single home and non portable prefix

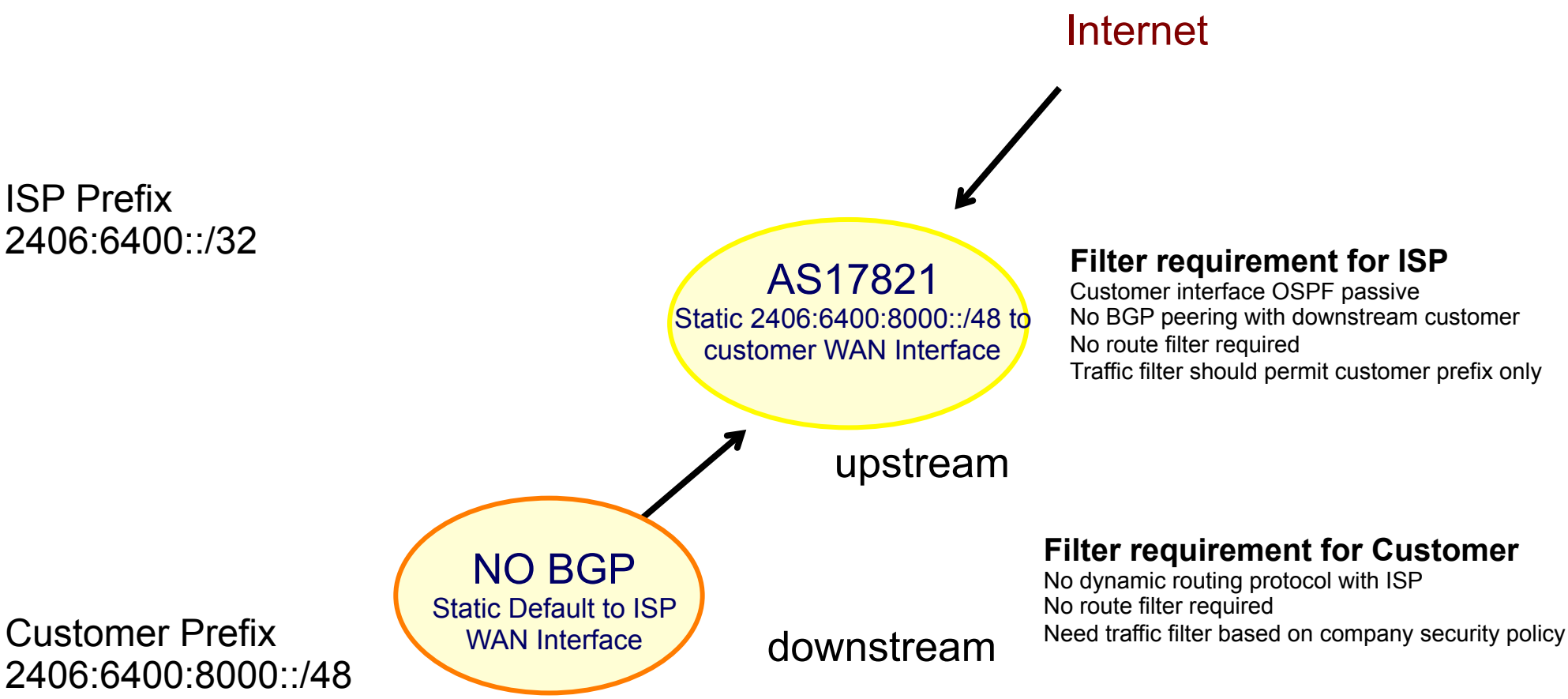

# Route Filtering

- Option 2: : Customer single home and portable prefix

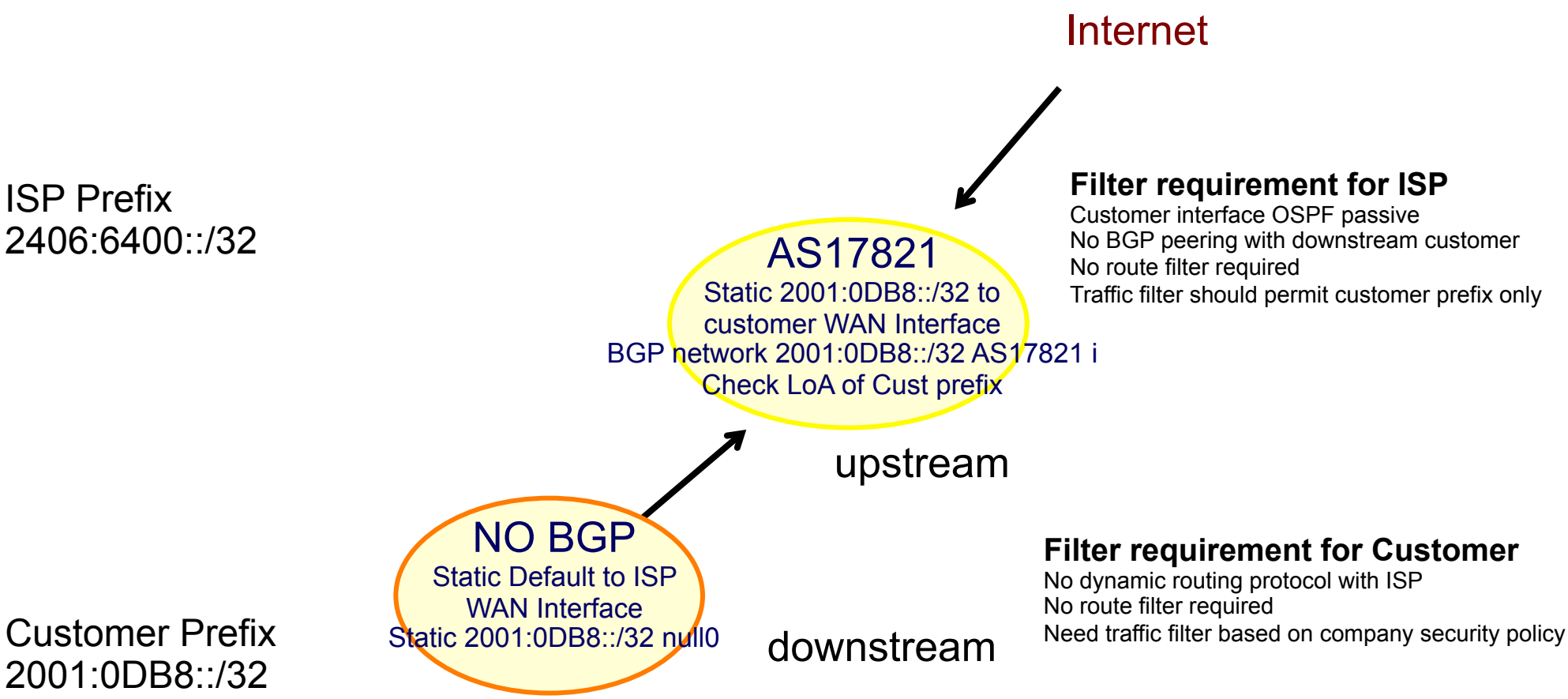

# Route Filtering

- Option 3: Customer multihome and non portable prefix

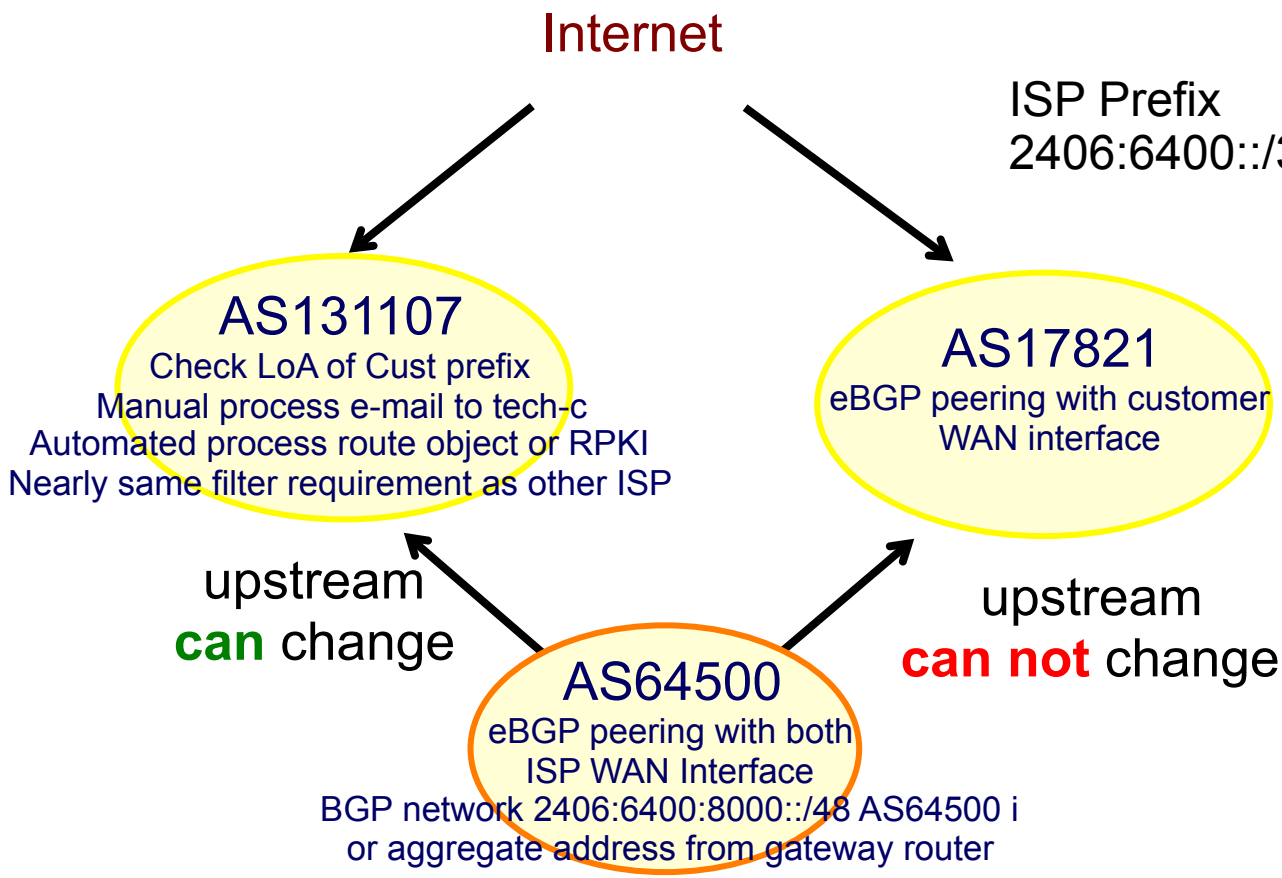


**Filter requirement for ISP**
Customer interface OSPF passive
BGP peering with downstream customer
Route filter permit 2406:6400:8000::/48 only in
Route filter permit ::/0, AS17821cust, all /48& /32 out
**Or** route filter permit ::/0 & AS17821 only out
AS path filter permit _64500$ in
Traffic filter should permit customer prefix in

**Filter requirement for Customer**
BGP peering with both upstream ISP
Route filter permit 2406:6400:8000::/48 only out
Route filter permit ::/0, AS17821cust, all /48& /32 in
**Or** route filter permit ::/0 & AS17821 only in
AS path filter permit ^$ out
Need traffic filter based on company security policy

# Route Filtering

- Option 4: Customer multihome and portable prefix

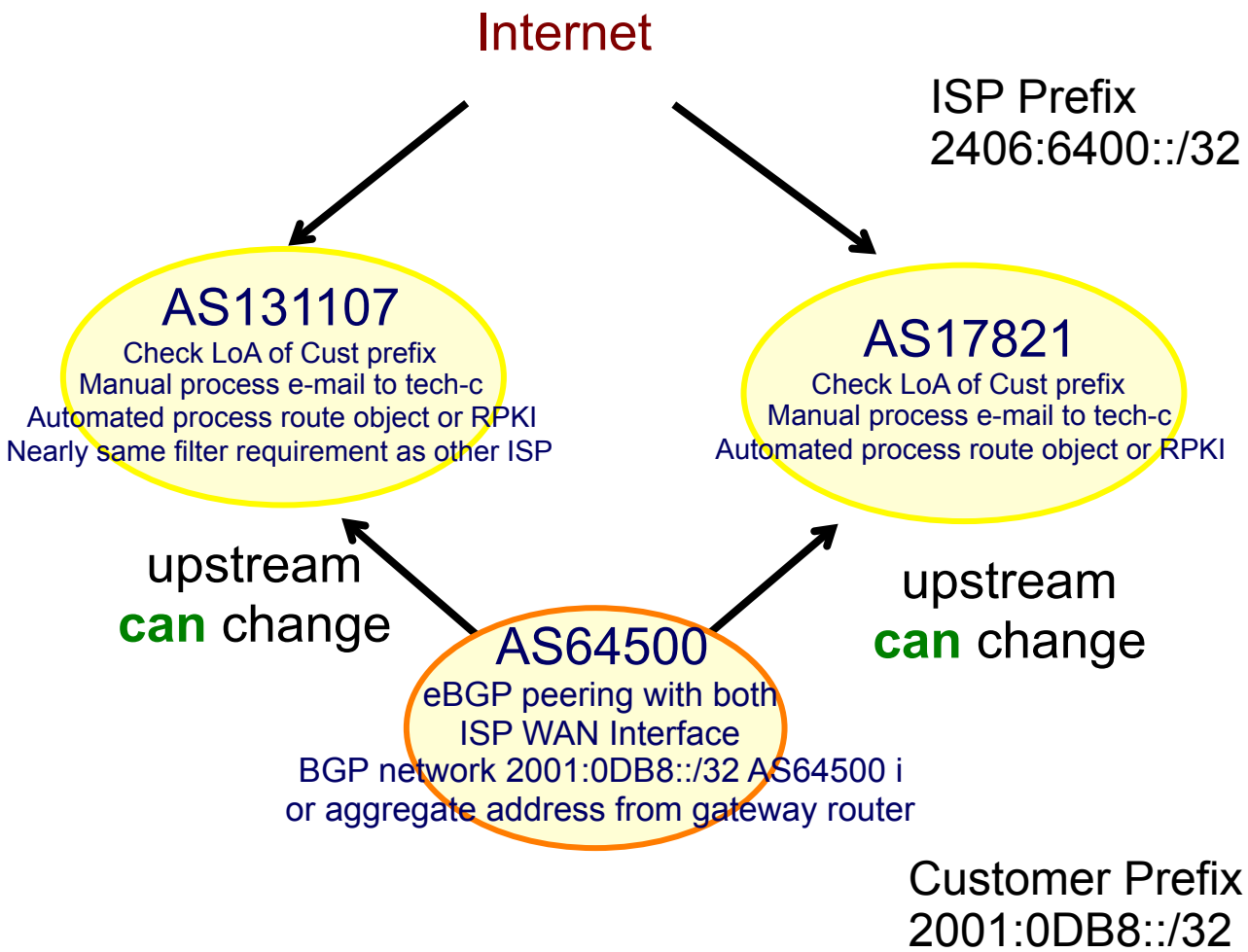


**Filter requirement for ISP**

Customer interface OSPF passive
BGP peering with downstream customer
Route filter permit 2001:0DB8::/32 only in
Route filter permit ::/0, AS17821cust, all /48& /32 out
**Or** route filter permit ::/0 & AS17821 only out
AS path filter permit _64500$ in
Traffic filter should permit customer prefix in

**Filter requirement for Customer**

BGP peering with both upstream ISP
Route filter permit 2001:0DB8::/32 only out
Route filter permit ::/0, AS17821cust, all /48& /32 in
**Or** route filter permit ::/0 & AS17821 only in
AS path filter permit ^$ out
Need traffic filter based on company security policy

# Route Filtering

- Downstream Customer BGP In process design issue:
  - Option 1: ISP default only In
    - Customer is accepting ::/0 only from upstream ISP prefix
  - Option 2: ISP default + local In
    - Customer is accepting ::/0 and upstream ISP prefix and their other customer portable prefixes **(Non portable prefixes should not)**
  - Option 3: ISP default + local + all In
    - Customer is accepting ::/0, upstream ISP aggregated prefix and their other customer portable prefixes **(Non portable prefixes should not)** and all other from Internet

# Route Filtering

- Option 1: ISP default only In
  - Can use a low configuration router (CPU/DRAM)

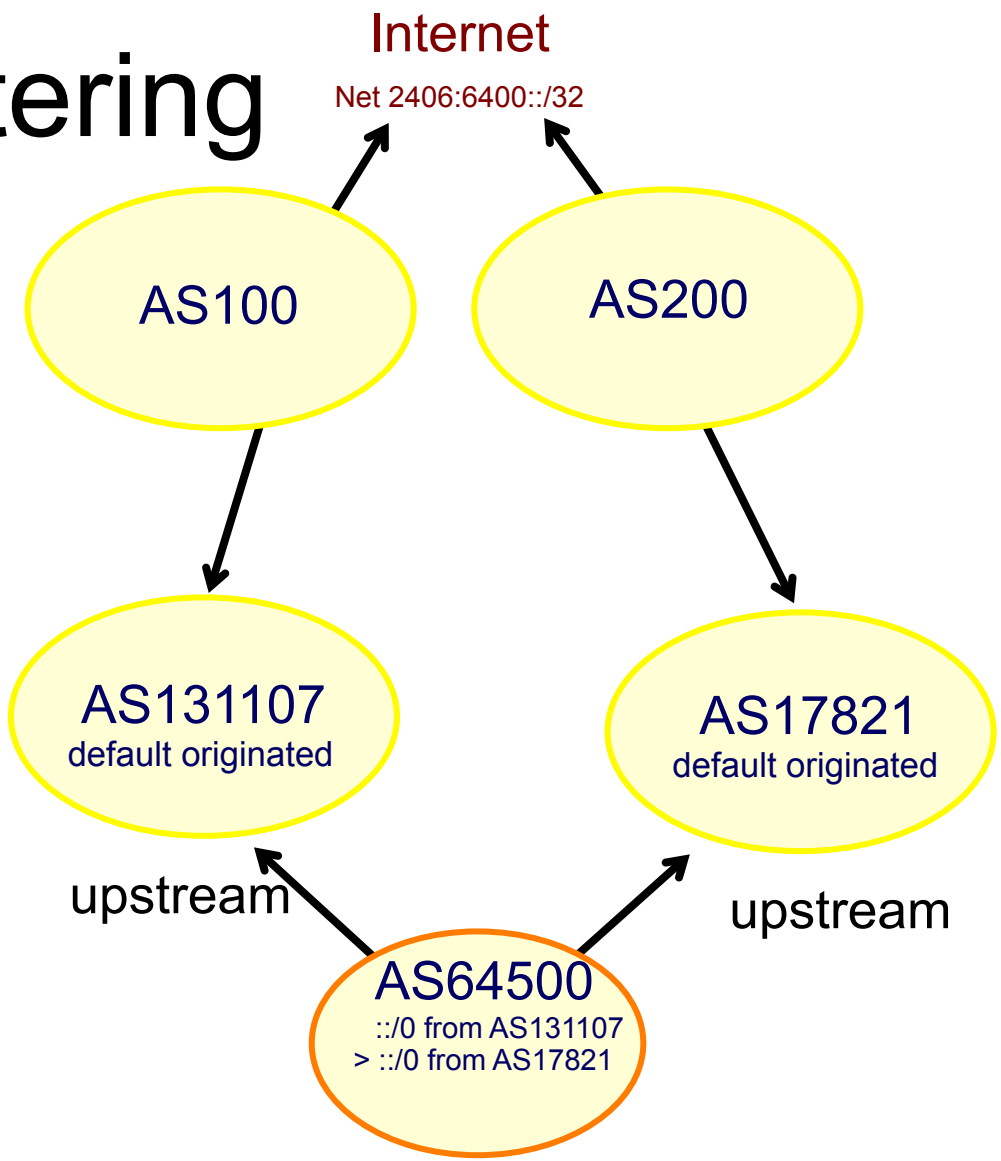

# Route Filtering

- Option 1: ISP default only In
  - Can use a low configuration router (CPU/DRAM)
  - Easy to manage small routing table

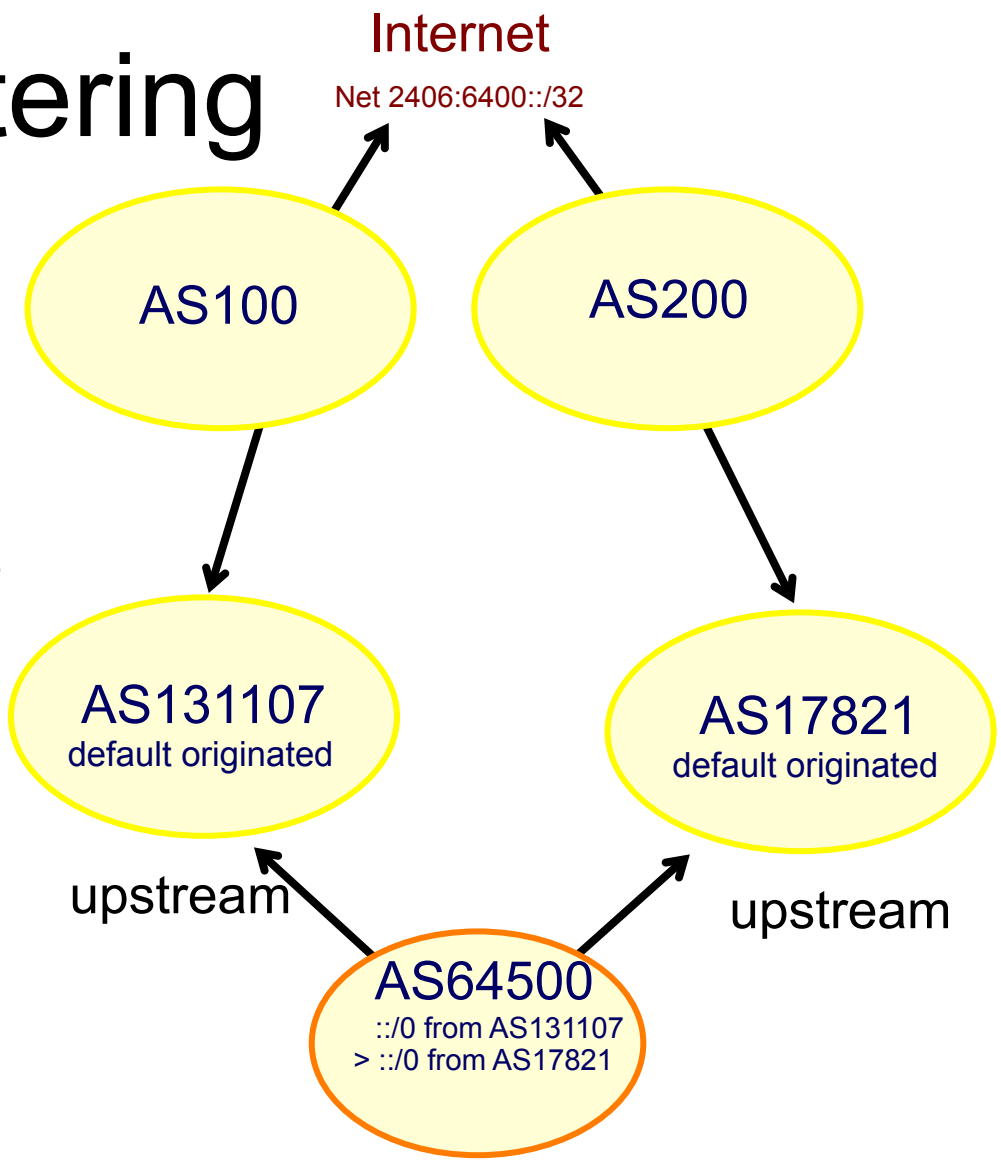

# Route Filtering

- Option 1: ISP default only In
  - Can use a low configuration router (CPU/DRAM)
  - Easy to manage small routing table
  - Do not support destination specific traffic engineering

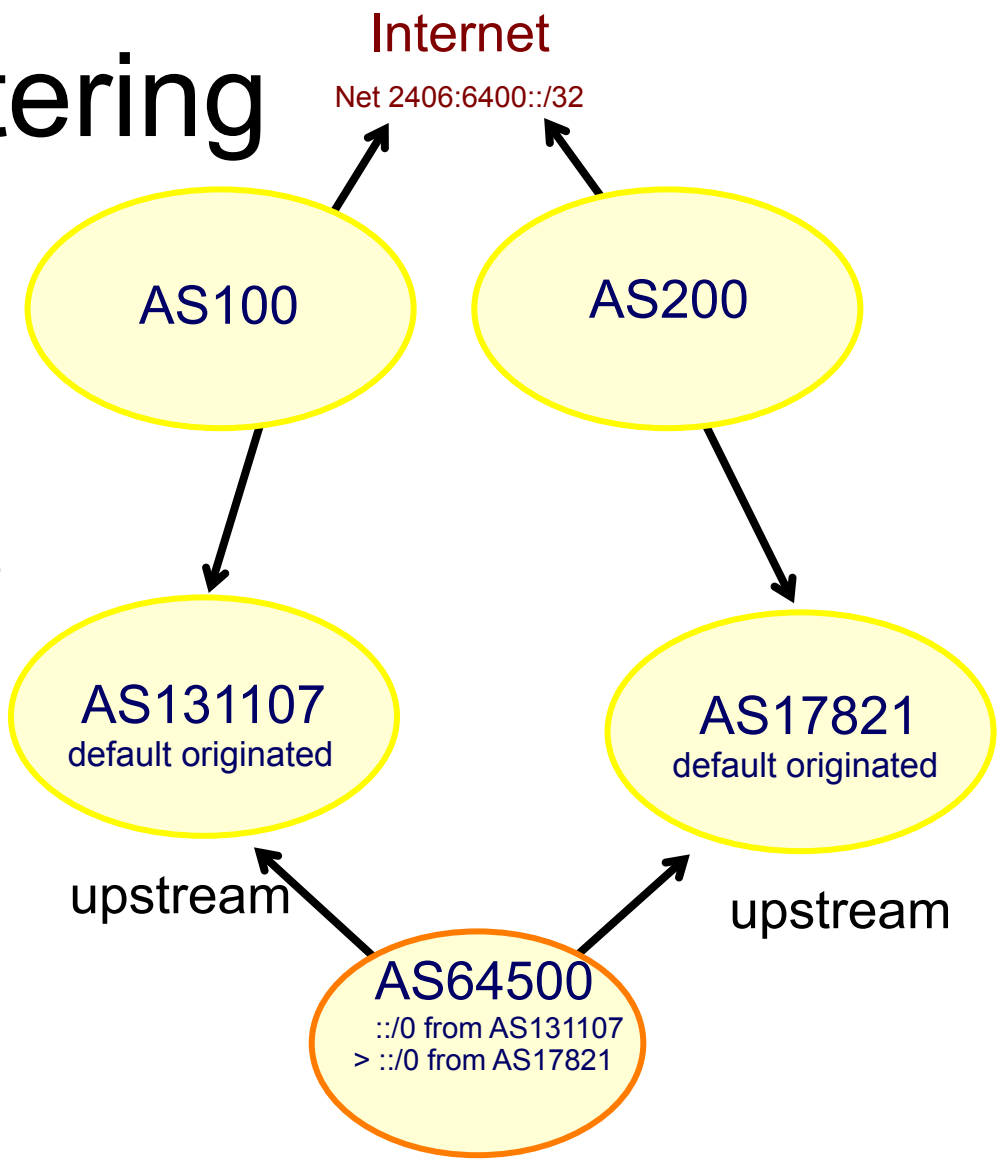

# Route Filtering

- Option 1: ISP default only In
  - Can use a low configuration router (CPU/DRAM)
  - Easy to manage small routing table
  - Do not support destination specific traffic engineering
  - Can not re-route traffic if remote transit is down

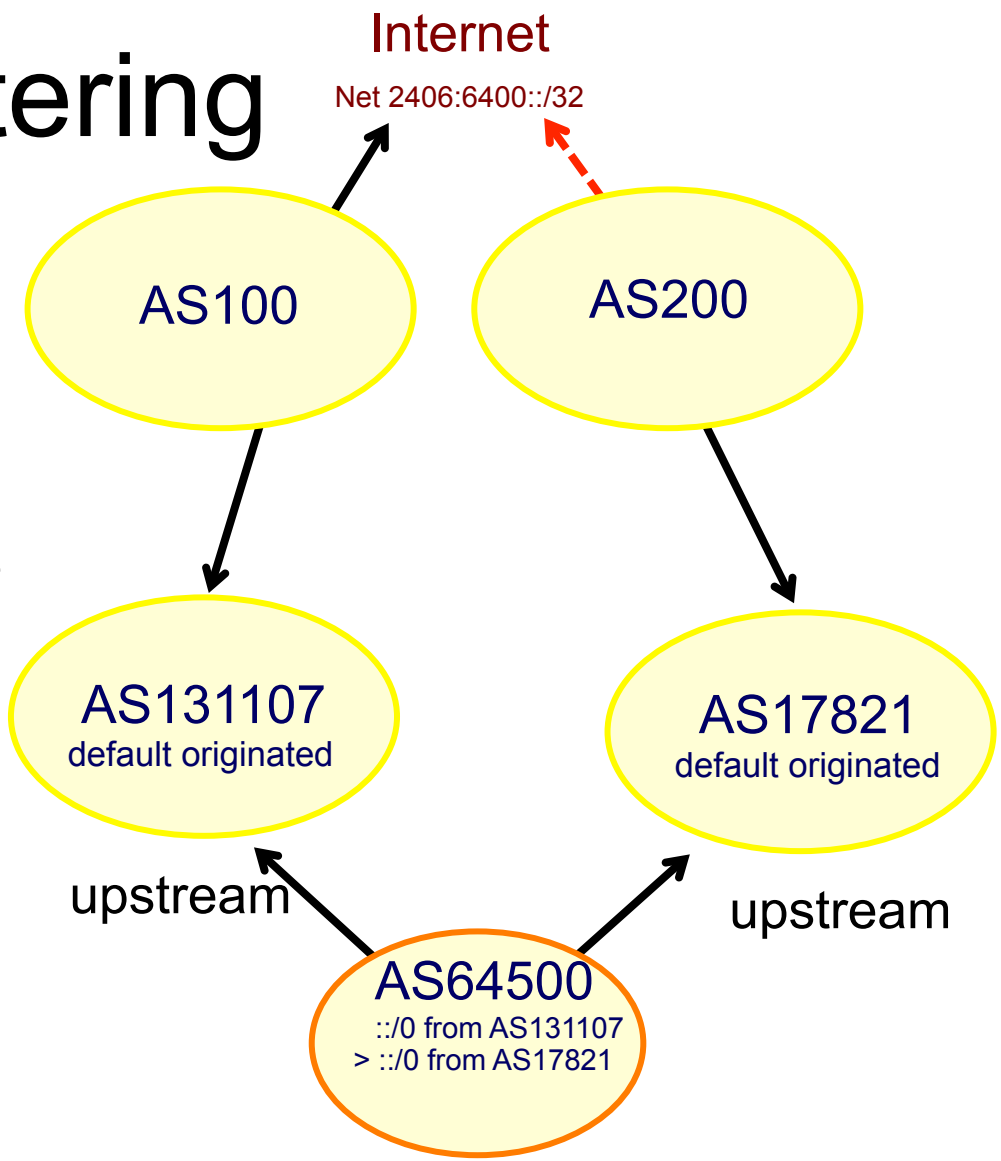

# Route Filtering

- Option 1: ISP default only In
  - Can use a low configuration router (CPU/DRAM)
  - Easy to manage small routing table
  - Do not support destination specific traffic engineering
  - Can not re-route traffic if remote transit is down
  - I.e. Network 2406:6400::/32 is withdrawn in AS200 but default path in AS64500 is still sending traffic via AS 17821)

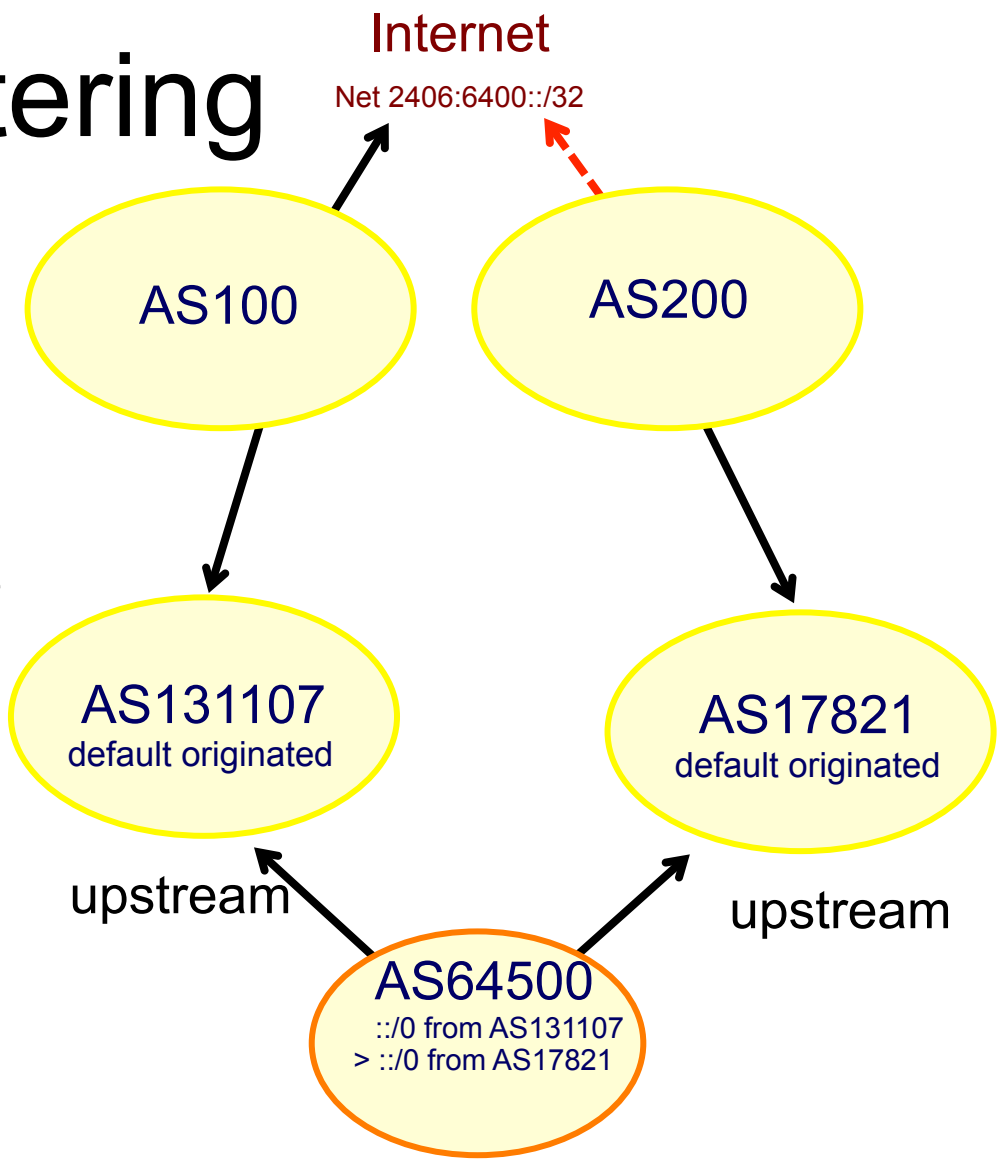

# Route Filtering

- Option 1: ISP default only In
  - Can use a low configuration router (CPU/DRAM)
  - Easy to manage small routing table
  - Do not support destination specific traffic engineering
  - Can not re-route traffic if remote transit is down
  - Prefixes originated in AS131107 can be routed via AS17821 **(Sub-optimal path)**

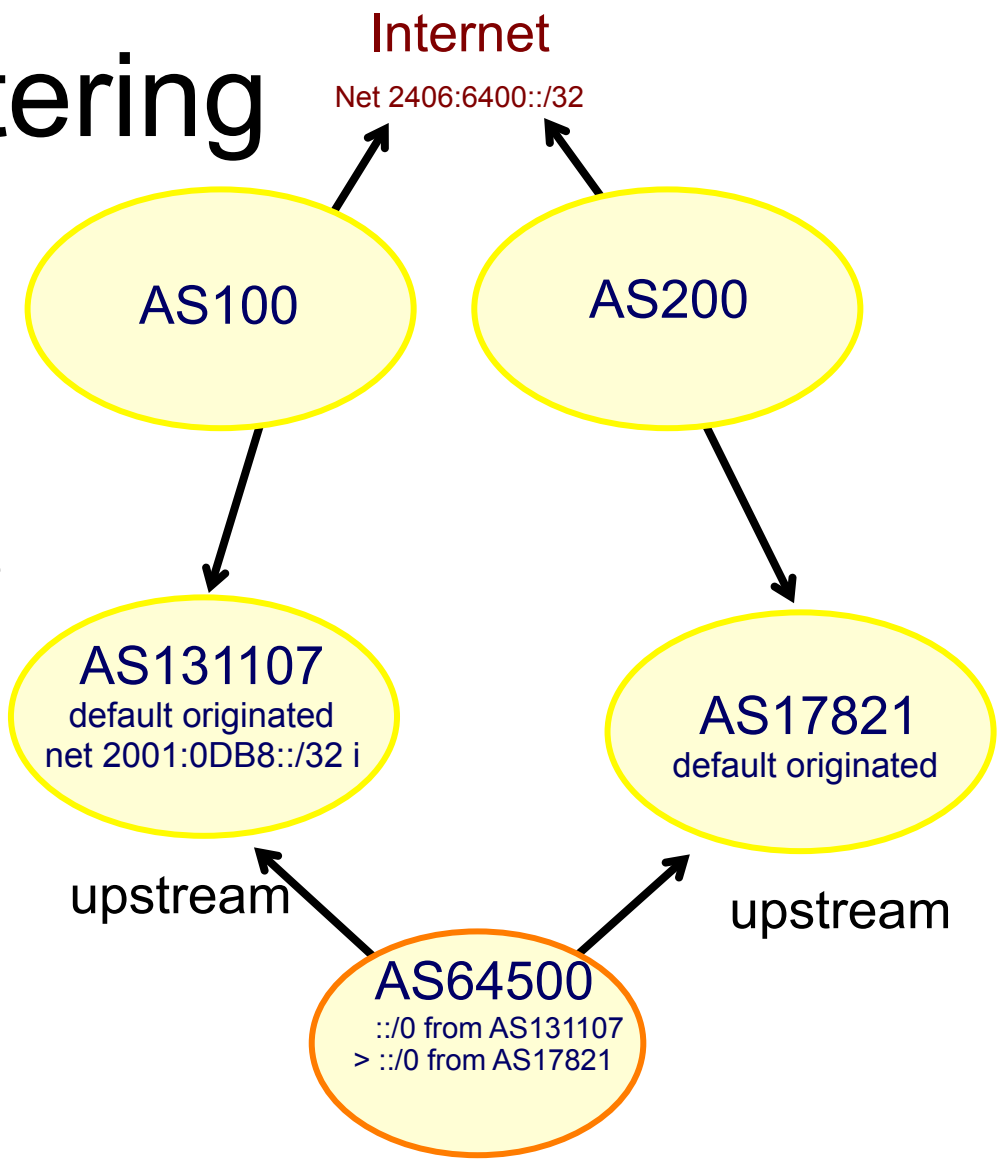

# Route Filtering

- Option 2: ISP default + local In
  - Can use a low configuration router (CPU/DRAM)
  - Easy to manage small routing table
  - Do not support destination specific traffic engineering to the remote
  - Can not re-route traffic if remote transit is down
  - AS131107 is sending its portable local route to AS64500

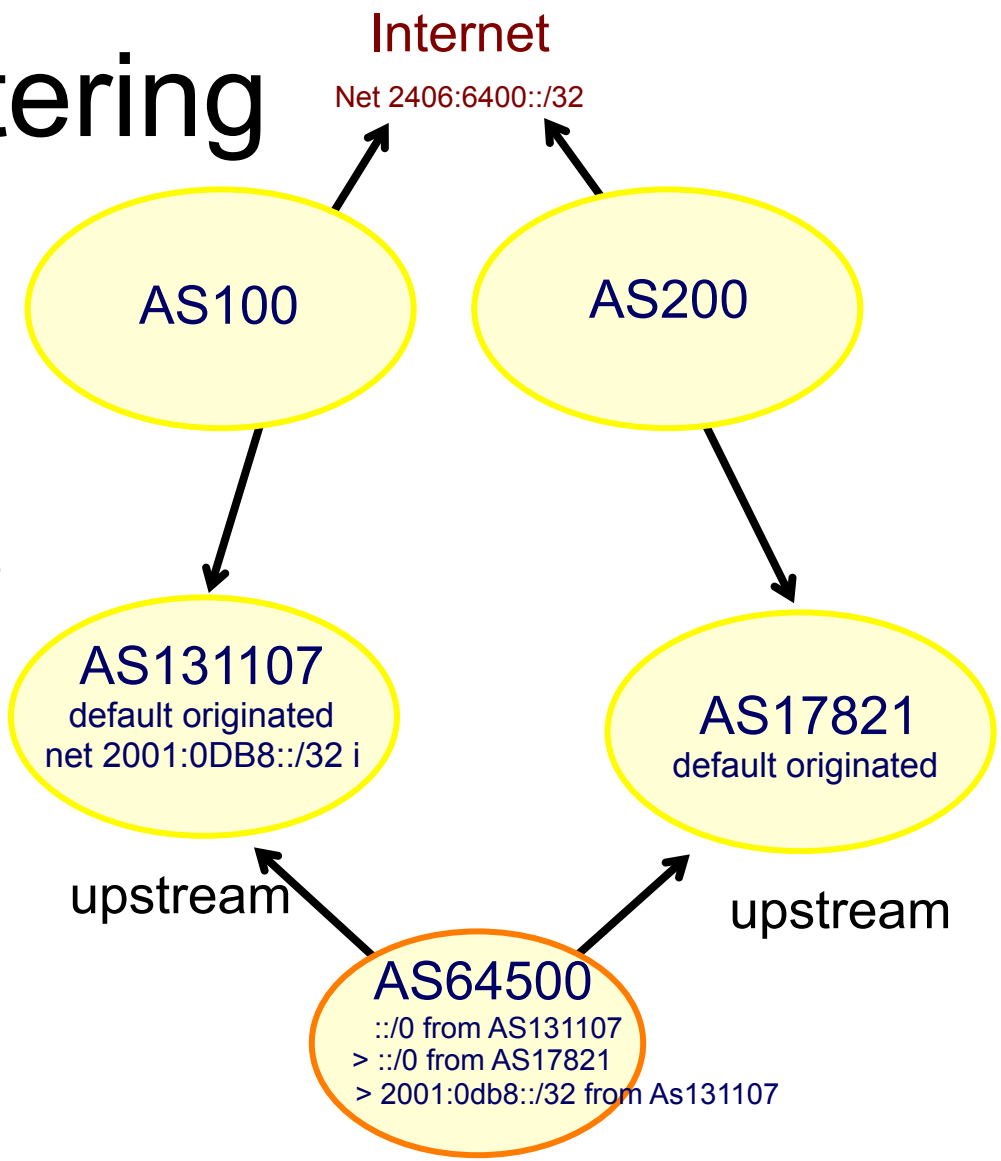

# Route Filtering

- Option 2: ISP default + local In
  - Can use a low configuration router (CPU/DRAM)
  - Easy to manage small routing table
  - Do not support destination specific traffic engineering to the remote
  - Can not re-route traffic if remote transit is down
  - AS131107 is sending its portable local route to AS64500
  - Prefixes originated in AS131107 can now be routed via AS131107 **(Optimal Path)**

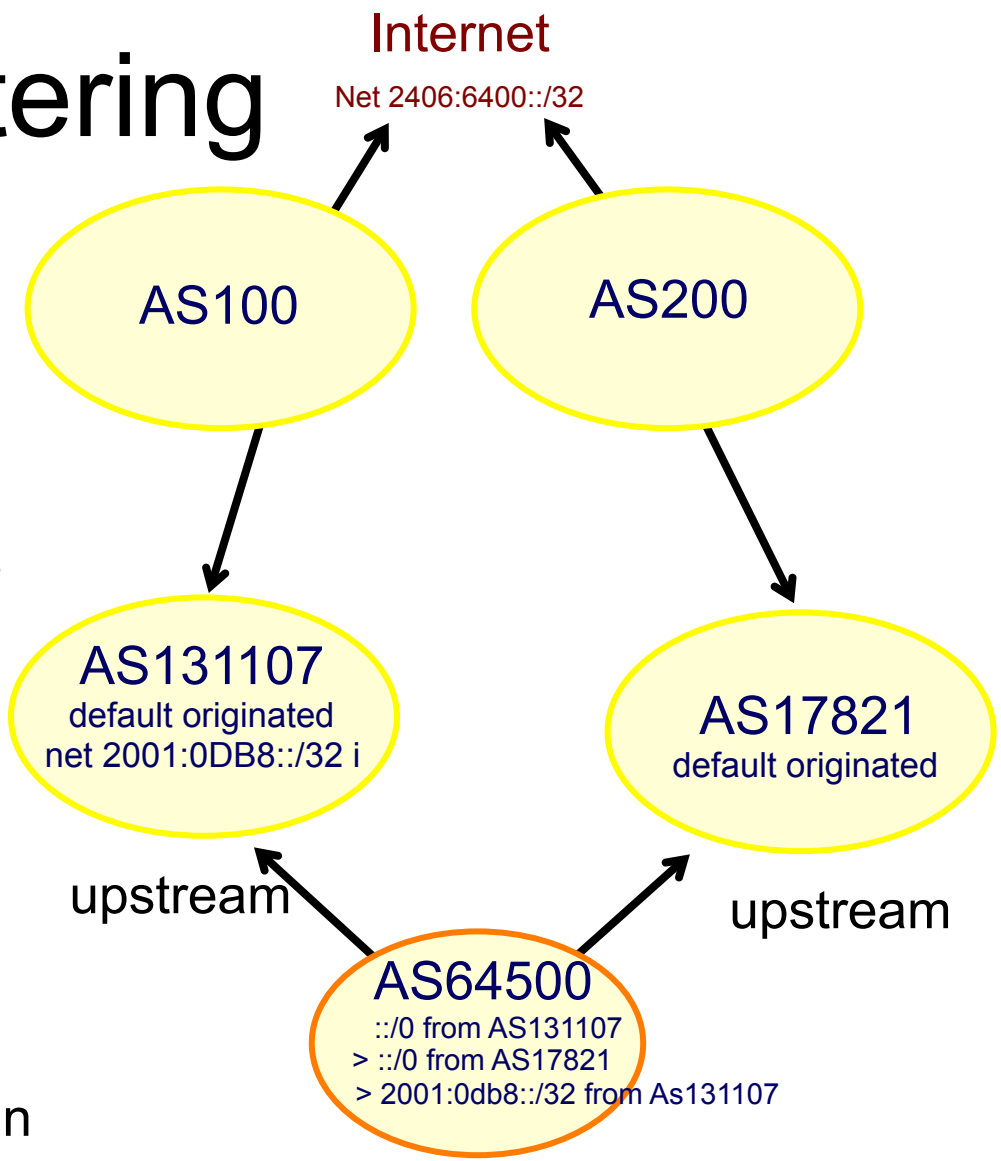

# Route Filtering

- Option 3: ISP default + local + all In
  - Need high configuration router (CPU/DRAM)

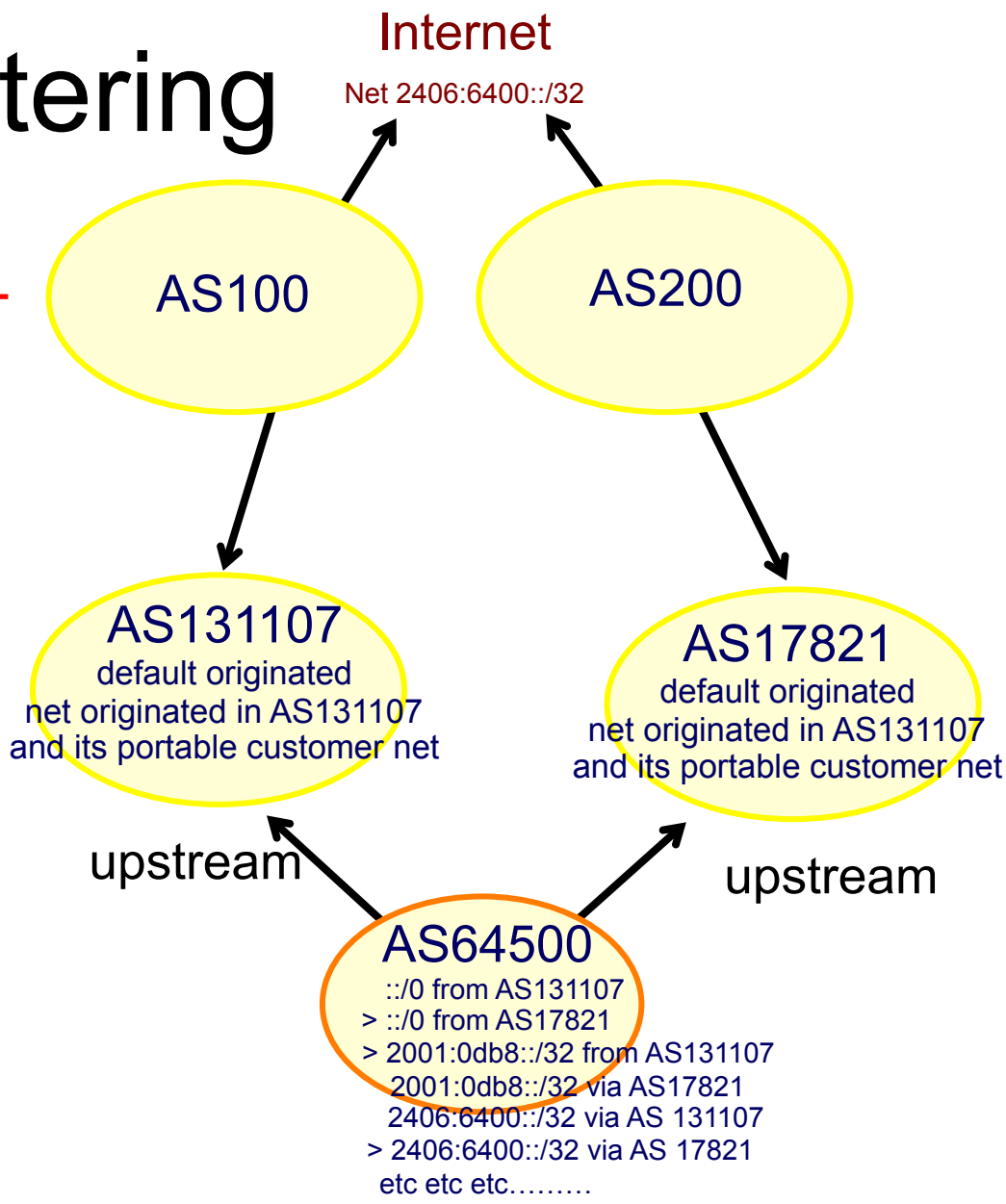

# Route Filtering

- Option 3: ISP default + local + all In
  - Need high configuration router (CPU/DRAM)
  - Need skilled people to manage large routing table

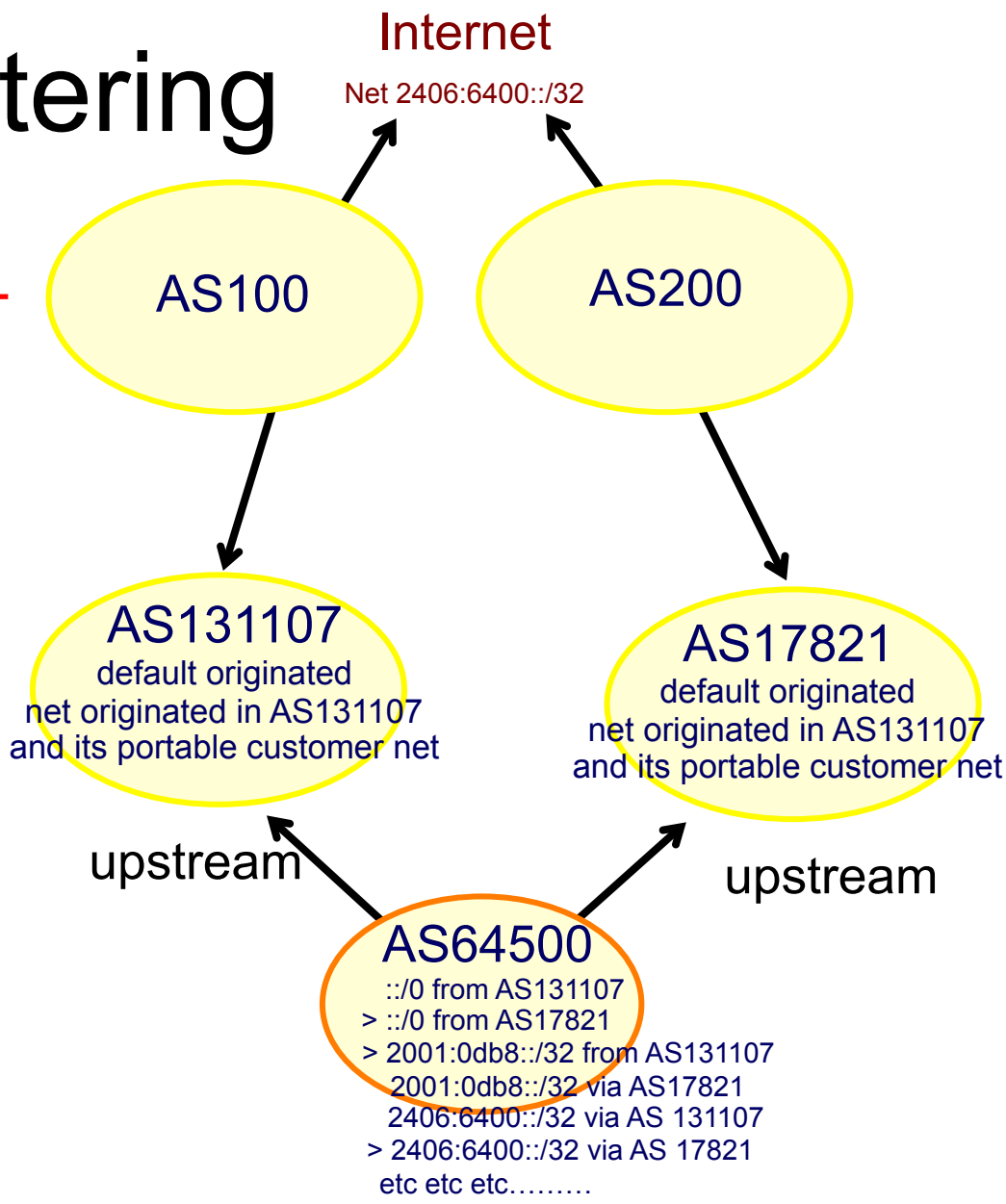

# Route Filtering

- Option 3: ISP default + local + all In
  - Need high configuration router (CPU/DRAM)
  - Need skilled people to manage large routing table
  - Support destination specific traffic engineering to the remote

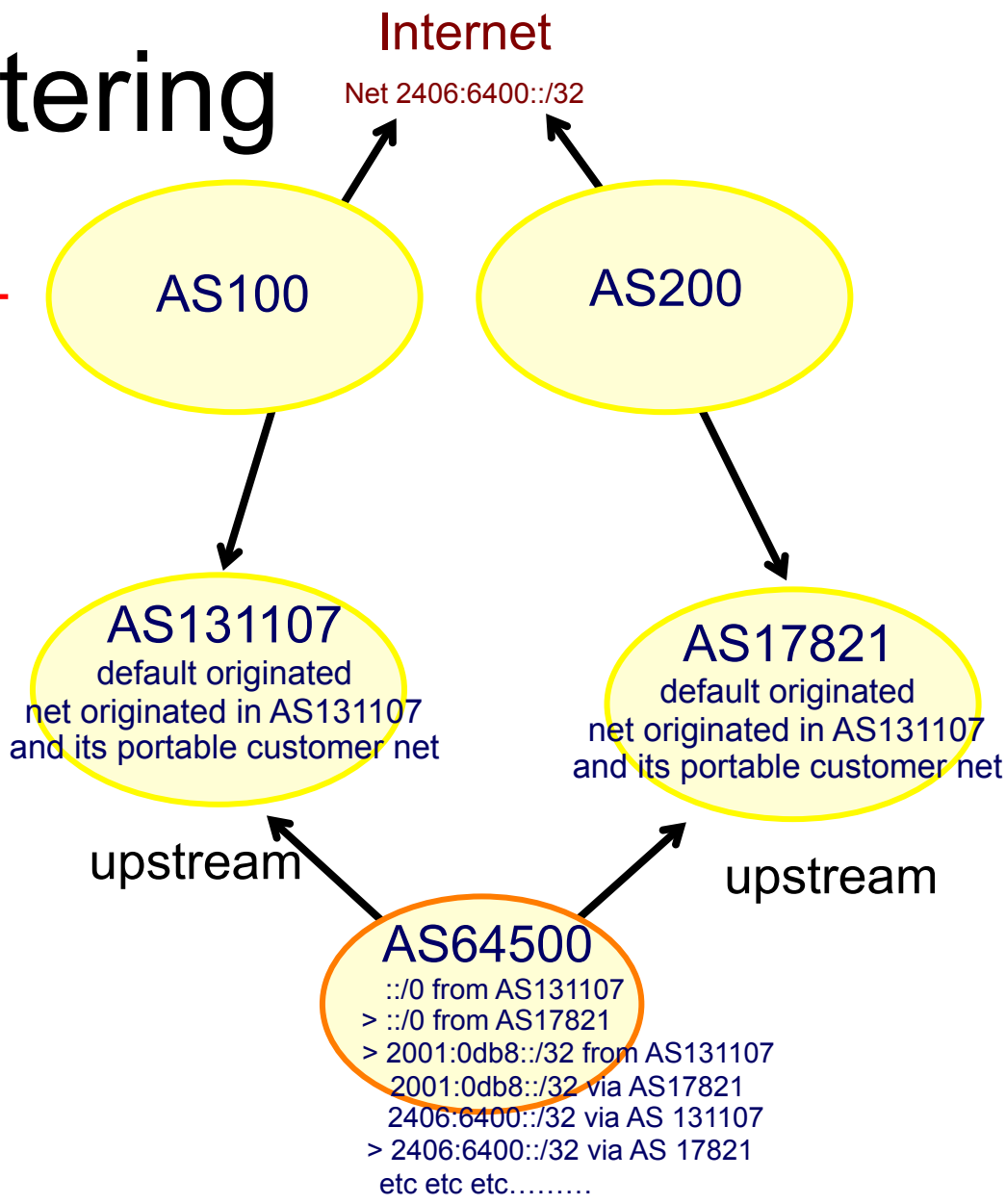

# Route Filtering

- Option 3: ISP default + local + all In
  - Need high configuration router (CPU/DRAM)
  - Need skilled people to manage large routing table
  - Support destination specific traffic engineering to the remote
  - Can now re-route traffic if remote transit is down

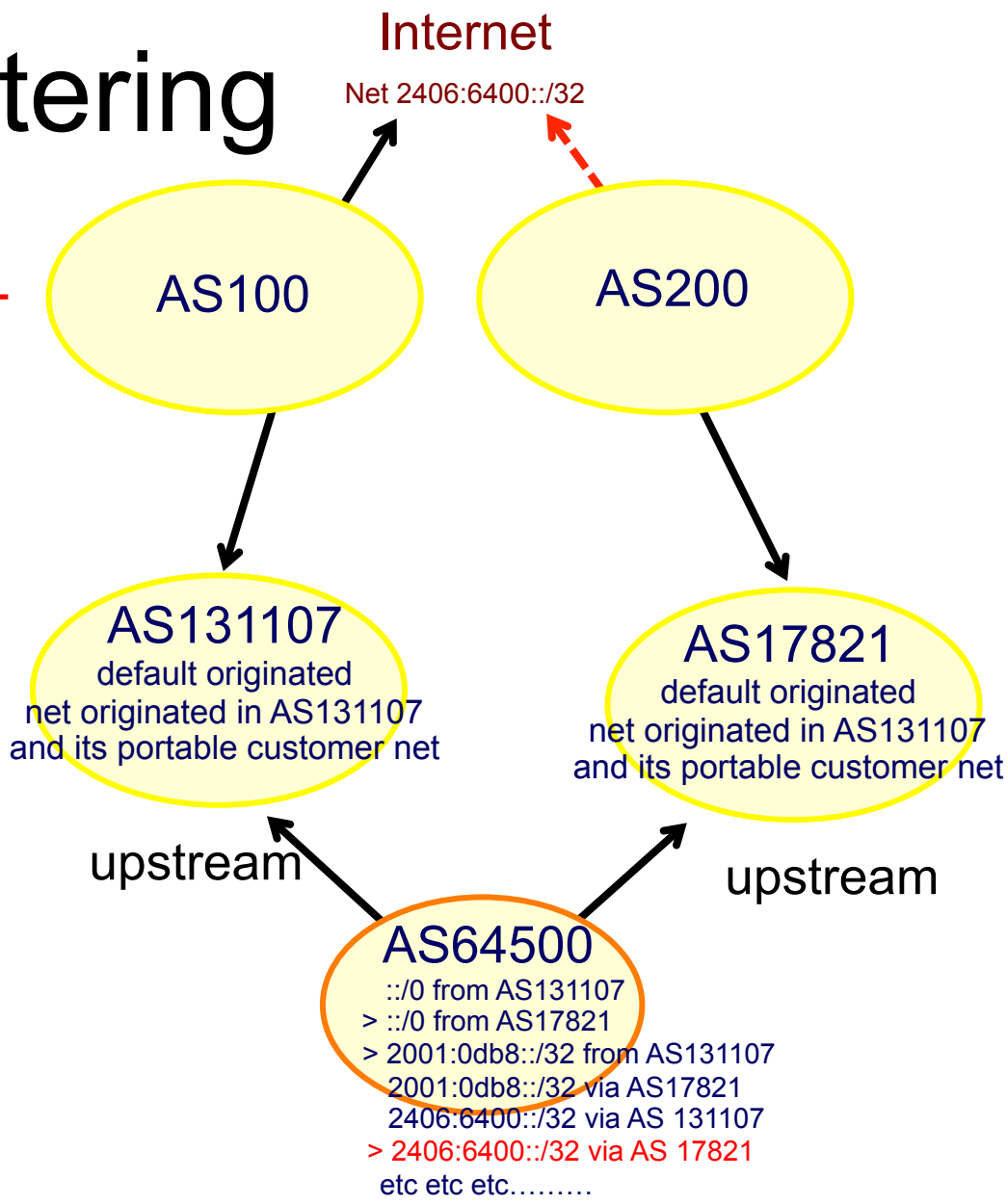

# Route Filtering

- Option 3: ISP default + local + all In
  - Need high configuration router (CPU/DRAM)
  - Need skilled people to manage large routing table
  - Support destination specific traffic engineering to the remote
  - Can now re-route traffic if remote transit is down

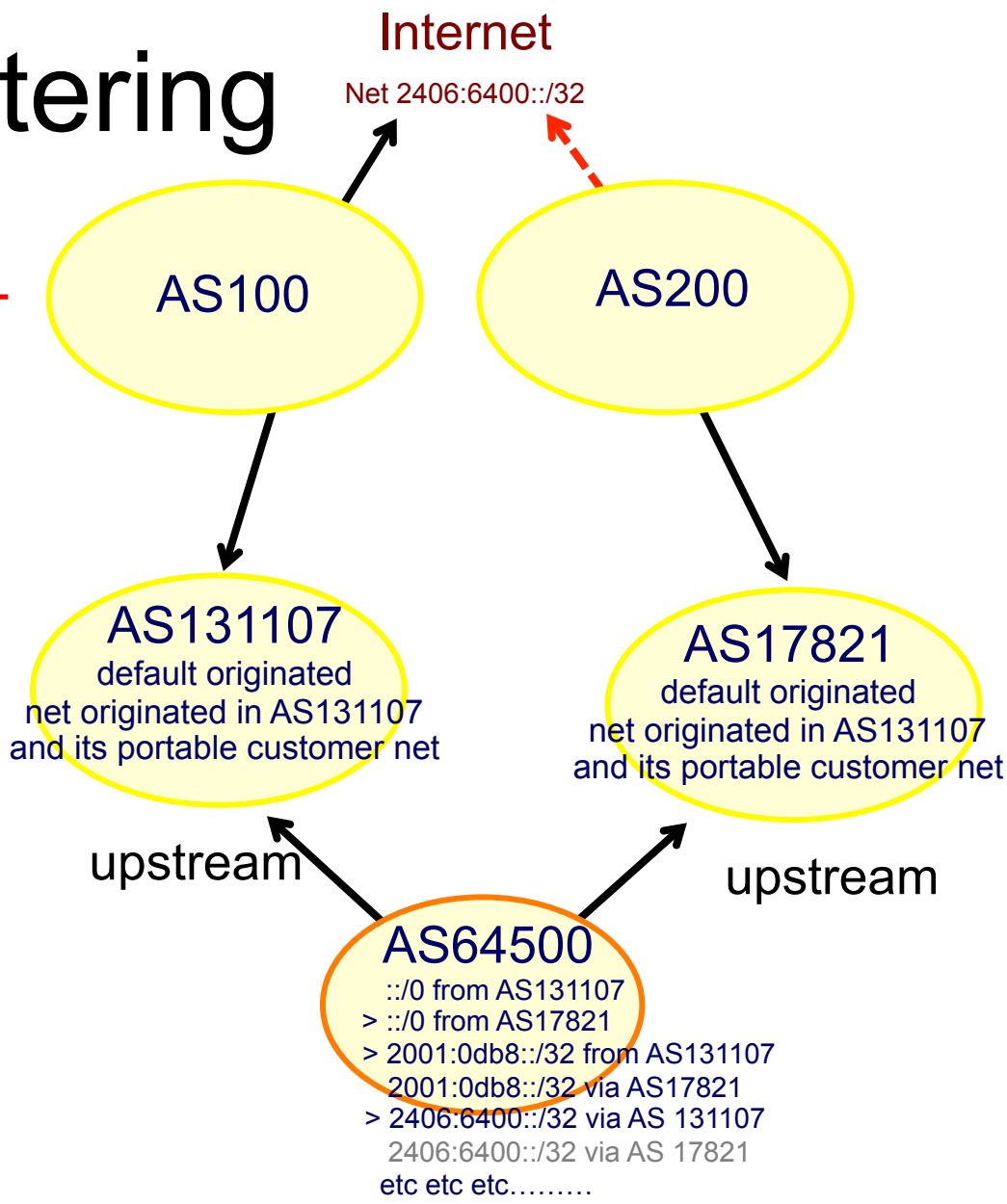

# Route Filtering

- Option 3: ISP default + local + all In
  - Need high configuration router (CPU/DRAM)
  - Need skilled people to manage large routing table
  - Support destination specific traffic engineering to the remote
  - Can now re-route traffic if remote transit is down
  - Prefixes originated in AS131107 or AS17821 can now be routed via AS131107 or AS17821 respectively

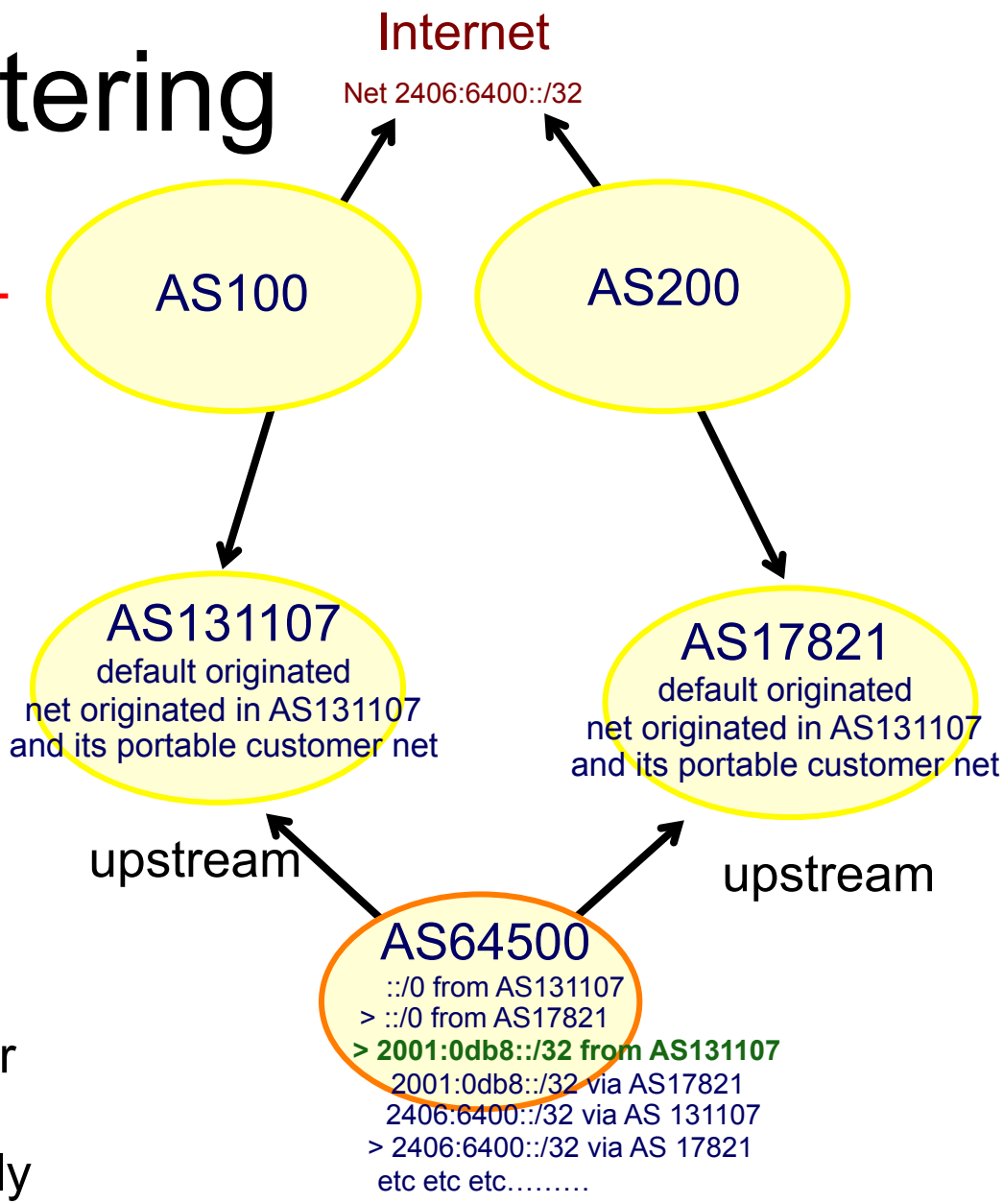

# Route Filtering BCP

- **Prefixes: From Upstream/Transit Provider**
- If necessary to receive prefixes from any provider, care is required.
  - Don’t accept default (unless you need it)
  - Don’t accept your own prefixes
- For IPv4:
  - Don’t accept private (RFC1918) and certain special use prefixes:
    http://www.rfc-editor.org/rfc/rfc5735.txt
  - Don’t accept prefixes longer than /24 (?)
- For IPv6:
  - Don’t accept certain special use prefixes:
    http://www.rfc-editor.org/rfc/rfc5156.txt
  - Don’t accept prefixes longer than /48 (?)

# Route Filtering BCP

- **Prefixes: From Upstream/Transit Provider**
- Check Team Cymru's list of "bogons"

  www.team-cymru.org/Services/Bogons/http.html
- For IPv4 also consult:

  datatracker.ietf.org/doc/draft-vegoda-no-more-unallocated-slash8s
- For IPv6 also consult:

  www.space.net/~gert/RIPE/ipv6-filters.html
- Bogon Route Server:

  www.team-cymru.org/Services/Bogons/routeserver.html
  - Supplies a BGP feed (IPv4 and/or IPv6) of address blocks which should not appear in the BGP table

# Route Filtering Plan in Training Lab

- We will use option 3: Config on ISP Edge router (In)
  - Receive individual customer prefix
  - i.e.

| | | | |
|---|---|---|---|
| On R1 | From | R13 | 2406:6400:8000::/48 |
| On R3 | From | R14 | 2406:6400:9800::/48 |
| On R4 | From | R15 | 2406:6400:a000::/48 |
| On R6 | From | R16 | 2406:6400:b800::/48 |
| On R7 | From | R17 | 2406:6400:c000::/48 |
| On R9 | From | R18 | 2406:6400:d800::/48 |
| On R10 | From | R19 | 2406:6400:e000::/48 |
| On R11 | From | R20 | 2406:6400:f800::/48 |

  - And prefix originated by customer AS

# Route Filtering Plan in Training Lab

- We will use option 3: Config on ISP Edge router (Out)
  - Send default prefix to customer i.e. ::/0
  - Send aggregated ISP prefix i.e. 2406:6400::/32
  - Send all individual customer prefix i.e. 2406:6400:8000::/48
    2406:6400:9800::/48
    2406:6400:a000::/48
    2406:6400:b800::/48
    2406:6400:c000::/48
    2406:6400:d800::/48
    2406:6400:e000::/48
    2406:6400:f800::/48
  - Send all Internet prefix with prefix length >/32, /32 and /48 only

# Route Filtering Plan in Training Lab

- We will use option 3: Config on CPE router (IN)
  - Receive default prefix to customer i.e. ::/0
  - Receive aggregated ISP prefix i.e. 2406:6400::/32
  - Receive all individual cust prefix i.e. 2406:6400:8000::/48
    2406:6400:9800::/48
    2406:6400:a000::/48
    2406:6400:b800::/48
    2406:6400:c000::/48
    2406:6400:d800::/48
    2406:6400:e000::/48
    2406:6400:f800::/48
  - Receive all Internet prefix with prefix length >/32, /32 and /48 only

# Route Filtering Plan in Training Lab

- We will use option 3: Config on CPE router (Out)
  - Send individual customer prefix only
  - i.e.

| | | | |
|---|---|---|---|
| From R13 | To | R1 | 2406:6400:8000::/48 |
| From R14 | To | R3 | 2406:6400:9800::/48 |
| From R15 | To | R4 | 2406:6400:a000::/48 |
| From R16 | To | R6 | 2406:6400:b800::/48 |
| From R17 | To | R7 | 2406:6400:c000::/48 |
| From R18 | To | R9 | 2406:6400:d800::/48 |
| From R19 | To | R10 | 2406:6400:e000::/48 |
| From R20 | To | R12 | 2406:6400:f800::/48 |

  - Send that prefix originated customer AS number

# Questions?

Thank You! ☺